ATTACHMENT 1

Original Lease Agreement

DocuSign Envelope ID: 79CE0DE1-CBA3-47F9-9288-5A11928C9301

Project: AT&T at Vandenberg Hills Little League
APN: 097-371-051 (Portion)
Folio: 003918
Agent: JJS

LEASE AGREEMENT
AT&T WIRELESS at Vandenberg Hills Little League

THIS LEASE AGREEMENT is made by and between the

COUNTY OF SANTA BARBARA,
a political subdivision of the State of California,
hereinafter referred to as "COUNTY,"

and

New Cingular Wireless PCS, LLC,
a Delaware limited liability company,
dba AT&T Wireless,
hereinafter referred to as "LESSEE,"

with reference to the following:

WHEREAS, COUNTY is the owner of that certain real property located in the County of Santa Barbara commonly known as Vandenberg Hills Little League Field (hereinafter "County Property"), which property is located at 300 Albireo Avenue in Lompoc, California, and is more particularly described as Assessor's Parcel Number 097-371-051 which property is used for the purposes of a county park and little league fields (hereinafter "Property") and is shown as the diagonally slashed area of Exhibit "A", attached hereto and incorporated herein by reference; and

WHEREAS, LESSEE desires to enter into a lease agreement (hereinafter "Agreement"), with the COUNTY to occupy and use a portion of said Property for a wireless communication facility subject to the terms and conditions contained herein.

NOW, THEREFORE, in consideration of the provisions, covenants, and conditions, contained herein, the parties agree as follows:

1. **ADMINISTRATION AND ENFORCEMENT:** The provisions of this Agreement shall be administered and enforced for the COUNTY by the COUNTY'S General Services Department.

DocuSign Envelope ID: 79CE0DE1-CBA3-47F9-9288-5A11928C9301

2. **LEASED AREA:** COUNTY hereby leases to LESSEE and LESSEE hereby takes from COUNTY the specific portion of the Property (hereinafter "Site") as shown on Exhibit "B", attached hereto and incorporated herein by reference, for the construction and operation of LESSEE'S wireless communication facility together with the new pole-mounted antennas to be installed.

3. **ACCESS TO THE SITE:** LESSEE shall be allowed to access the Site through the Property during normal operating hours. LESSEE shall only access the Site on the access road marked on the architectural plans attached hereto as Exhibit "C" and by reference made a part hereof. For any required access after the County Park's normal operating hours (emergency situations and equipment failure excepted), LESSEE shall give reasonable notice, which shall be defined as five (5) business days, to the COUNTY's Real Property Manager prior to gaining access to the Site; provided, however, in the event of an emergency or equipment failure, LESSEE may access the Site and shall endeavor to notify the COUNTY's Real Property Manager at (805) 568-3070 prior to accessing the Site and in the event LESSEE is unable to reach the COUNTY's Real Property Manager, LESSEE shall notify COUNTY of such access within twenty-four (24) hours after said access. COUNTY shall not be responsible for maintaining the access road to the Site.

COUNTY shall not be liable to LESSEE for lack of access to the Site as a result of natural causes. However, in the event that the Site becomes inaccessible as a result of natural causes, COUNTY shall to the extent necessary cooperate with LESSEE to restore access in a timely fashion.

In the event COUNTY implements security programs and policies as part of County's governing ordinance, LESSEE shall comply with such reasonable security programs and policies.

4. **PURPOSE AND USE:** LESSEE shall use the Site to construct, maintain, repair, alter, replace, upgrade and/or remove or have constructed, maintained, repaired, altered, replaced, upgraded all or any portion of LESSEE'S wireless communication facility, including but not limited to, the equipment shelter, radio equipment, antenna support structures, antennas, utility conduits, poles, wires, anchors, guys, and all other appurtenant equipment and operations which are incidental thereto and necessary to operate and maintain LESSEE'S wireless communication facility (hereinafter "Facility"), and to transmit and receive communication signals in any and all frequencies which do not interfere with other wireless communications existing as of the date of this Agreement, and for all purposes incidental thereto. LESSEE shall ensure that both the use and construction of the Site is in accordance with the Conditions of Approval (or any subsequent changes or modifications thereof) set out in Attachment B of the COUNTY'S Planning Commission Conditions of Approval dated July 29, 2020, Case No. 19CUP-00000-00022. LESSEE shall be responsible for supplying, installing and maintaining all power and utilities for the Site.

LESSEE'S use of the Site shall conform to the equipment and antenna specifications described in Exhibit "D", attached hereto and by reference made a part hereof. LESSEE shall comply with any land use and building permit requirements of the Santa Barbara County Planning Department. LESSEE shall not expand its use of the Site beyond the scope of said specifications nor use the Site for any other purposes without the express written approval of the COUNTY'S Real Property Manager, such approval not to be unreasonably withheld, conditioned or delayed, and

DocuSign Envelope ID: 79CE0DE1-CBA3-47F9-9288-5A11928C9301

comply with all requirements of any and all permits. Approval from COUNTY's Real Property Manager neither excuses LESSEE from securing any permits or other approvals required to implement changes LESSEE proposes to the Site or its Facility nor obligates other COUNTY departments to issue permits for or approve any changes LESSEE proposes to the Site or its Facility. LESSEE shall comply with all requirements of any and all permits. It is understood and agreed to by each party that LESSEE shall have the right to make changes to and replacements of equipment which are of a substantially similar or "like-kind" nature without having to obtain the approval of COUNTY, provided such changes do not alter the square footage of the lease area of the Site nor change the visual impact, antenna size, or change the level of antenna transmission of LESSEE'S Site and Facility. LESSEE shall notify COUNTY in writing within thirty (30) days of any such changes made to LESSEE'S Facility without COUNTY'S consent.

5. **TERM:** The initial term of this Agreement is for a period of five (5) years ("Initial Term"), commencing on May 1, 2021 (hereinafter "Commencement Date") and shall terminate on April 30, 2026, unless sooner terminated as hereinafter provided.

6. **EXTENSION AND RENEWAL OF LEASE:** In the event this Agreement has not otherwise been terminated and LESSEE is not in Default (after expiration of all cure periods) at the end of the above-referenced term, then such term may be extended for three (3) additional terms of five (5) years each (each a "Renewal Term") upon mutual agreement by LESSEE and COUNTY. All extensions shall be requested by LESSEE in writing at least three (3) months, but no more than twelve (12) months, prior to the expiration of the Initial Term or then current Renewal Term, and such extensions shall be set forth as follows:

Extension Period One:	May 1, 2026 through April 30, 2031
Extension Period Two:	May 1, 2031 through April 30, 2036
Extension Period Three:	May 1, 2036 through April 30, 2041

In the event of any such extensions the Rent shall be calculated as per Section 8, RENT, and Section 9, COST OF LIVING ADJUSTMENT, or such other basis as the parties may then agree. The Initial Term and any Renewal Terms are collectively referred to as the Term ("Term").

7. **SECURITY DEPOSIT:** A deposit in the amount of FIVE THOUSAND DOLLARS ($5,000.00) shall be due to COUNTY within forty-five (45) days after the date this Agreement is signed by COUNTY (hereinafter "Security Deposit"). COUNTY shall have the right to use monies from this Security Deposit to make any repairs or equipment removal not made by LESSEE for which LESSEE is otherwise obligated to make and to restore the Site in the event LESSEE does not properly do so according to its obligations as set forth in Section 13, ABANDONMENT OF SITE/DISPOSITION OF PERSONAL PROPERTY, Section 17, MAINTENANCE AND REPAIR, or Section 35, SURRENDER OF PREMISES, herein. In the event that, during the course of this Agreement, COUNTY is required to use a portion of the Security Deposit to make repairs, then LESSEE shall, within thirty (30) days of such repair and LESSEE'S receipt of COUNTY'S written notice to reimburse COUNTY, thereafter reimburse the Security Deposit monies used by COUNTY in connection with the repairs. At the expiration or earlier termination of this Agreement, COUNTY shall release the Security Deposit, less any costs related to repair or equipment removal, if any, within thirty (30) days of receipt of LESSEE'S

DocuSign Envelope ID: 79CE0DE1-CBA3-47F9-9288-5A11928C9301

written notice in accordance with the terms of Section 35, SURRENDER OF PREMISES, herein.

8. **RENT:** The base annual rent payable by LESSEE to COUNTY during the first year of this Agreement shall be THIRTY THOUSAND and 00/100 DOLLARS ($30,000.00) ("Rent") in lawful money of the United States of America due concurrent and in accordance with Section 7, SECURITY DEPOSIT, of this Agreement. The initial Rent payment is due no later than forty-five (45) days after the Commencement Date.

Thereafter, Rent shall be paid annually, in advance, on or before May 1st of each and every calendar year of the Term beginning in the year 2022. Rent due for any period during the Term which is for less than one (1) calendar year shall be prorated based upon a three hundred sixty-five (365) day year. The Rent shall be subject to adjustment as set out in Section 9, COST OF LIVING ADJUSTMENT, below. If Rent is not paid ten (10) days after the date due (the Commencement Date or any anniversary thereof), LESSEE shall pay the interest accrued on the unpaid balance at ten percent (10%) per annum from the date it became due until it is paid.

Rent payments shall be made payable to "County of Santa Barbara" and sent to COUNTY at the address as stated in Section 26, NOTICES, herein below.

9. **COST OF LIVING ADJUSTMENT:** Beginning on May 1, 2022, and on each and every anniversary of this date, the Rent provided in Section 8, RENT, above shall be subject to a Cost of Living Adjustment and shall be increased from the Rent payable during the immediately preceding year of the Term by three percent (3%).

10. **SITE SUITABILITY:** LESSEE has investigated the Property and the Site and has determined that they are suitable for LESSEE'S intended operations, and therefore, LESSEE hereby accepts, by way of executing this Agreement, the Site in its existing condition.

LESSEE ACKNOWLEDGES THAT, EXCEPT AS STATED HEREIN, INCLUDING BUT NOT LIMITED TO LESSEE'S UTILITY INSTALLATION REFERENCED IN SECTION 15 HEREOF, COUNTY HAS MADE NO REPRESENTATIONS OR WARRANTIES ABOUT THE CONDITION OF THE PROPERTY OR SITE, OR THE SUITABILITY OF SAME FOR THE INTENDED USE BY LESSEE.

11. **CONSTRUCTION OF THE FACILITY AND FUTURE ALTERATIONS:** Prior to the commencement of LESSEE'S construction of its Facility, a pre-construction meeting will be scheduled with COUNTY, through the Real Property Manager, or their designated agent, at the Site to review project procedures, designation of project and/or construction managers, and project scheduling. LESSEE shall submit to the Real Property Manager, or their designated agent, periodic status reports indicating description of finished work and milestones.

Upon compliance with all required permitting, construction of the Facility, at LESSEE's sole expense, shall begin promptly after the Commencement Date and shall be pursued expediently to completion. Copies of all required land use permit(s) and building permit(s), as applicable, are attached hereto and by reference made a part hereof as Exhibits "E" and "F", respectively.

LESSEE shall install and construct the Facility in accordance with Exhibits "C", "E" and "F", and LESSEE acknowledges that compliance of the construction of its Facility may be

DocuSign Envelope ID: 79CE0DE1-CBA3-47F9-9288-5A11928C9301

administered by COUNTY's Planning and Development Department and/or Building and Safety Division. LESSEE shall give COUNTY no less than ten (10) days written notice prior to the commencement of any installation or construction work in, on, or about the Site, with the exception of regular maintenance, minor repair visits and emergency work, and shall keep the Property and Site free and clear of liens for labor and materials by or on behalf of LESSEE.

Any work done by LESSEE or its agents on or around the Site during the construction of LESSEE's Facility shall conform to the construction schedule described in Exhibit "G", attached hereto and by reference made a part hereof. LESSEE or its Contractor shall, during all phases of construction, have a designated representative present on the Site to monitor construction and ensure compliance with the aforementioned work plan. In addition, COUNTY may, at its option, have a designated representative on Site who, during all phases of construction, shall have the right to suspend and/or terminate any and all phases of such construction that do not substantially comply with Exhibit "C," "D," "E," or "F". The construction and installation to be done hereunder shall be scheduled and executed at such time and in such a way as to cause, to the extent reasonably feasible, the least inconvenience to the COUNTY, it officers, agents, and employees and with proper consideration for the rights of the public and other COUNTY tenants, vendors, and contractors.

Upon completion of the installation and construction of the Facility, a post-construction meeting for final inspection will be scheduled with COUNTY, through the Real Property Manager, or its designated agent, at the Site for final inspection of completed work.

In the event that LESSEE wishes during the installation and construction or in the future to alter or improve the Site in additional ways not anticipated by this section or by Section 14.D herein, LESSEE shall obtain the advance written approval from the COUNTY'S Real Property Manager, which approval shall not be unreasonably withheld, conditioned or delayed, and comply with all requirements of any permits. COUNTY, in its role as proprietor of the Property, shall use its best efforts to respond in a timely manner to LESSEE'S request to alter or improve the Site.

The requirements relating to construction set forth herein are those of COUNTY as landowner and not as a governmental entity. Nothing in this Agreement shall be construed to entitle LESSEE to undertake construction of the Facility or additional future improvements without complying with all permitting required by COUNTY in its governmental capacity.

COUNTY warrants that it has the right and the ability to enter into this Agreement on the subject Property.

12. **TITLE TO FACILITY**: Title to the Facility shall vest with LESSEE. Upon expiration of the Term of this Agreement, or earlier termination as provided herein, at LESSEE'S option, and upon COUNTY'S approval, title to the Facility and utility conduits, except as stated below, shall pass to COUNTY and the parties shall execute whatever documents are reasonably necessary to evidence such passing of title. In the event COUNTY takes title to the Facility, COUNTY acknowledges and agrees to take possession of the Facility and utility conduits in their then "as-is" condition, without any representation or warranty by LESSEE as to their fitness for a particular purpose, and LESSEE shall thereafter have no further liability for same. For purposes of this Section 12, TITLE TO FACILITY, radios, radio cabinet equipment, antennas, and other similar electronic equipment and any antenna structures (hereinafter "LESSEE'S Owned Facilities") shall not be a part of the Facility, and LESSEE shall retain title to such.

DocuSign Envelope ID: 79CE0DE1-CBA3-47F9-9288-5A11928C9301

13. **ABANDONMENT OF SITE/DISPOSITION OF PERSONAL PROPERTY:** LESSEE shall not abandon, vacate, or surrender the Site at any time during the Term of this Agreement and if LESSEE does abandon, vacate, or surrender said Site, any personal property belonging to LESSEE and left on the Site more than sixty (60) days after notice from COUNTY to LESSEE of such abandonment, vacation or surrender shall be deemed abandoned at the option of the COUNTY, and title to such shall pass to COUNTY. This provision shall also apply to personal property left after the termination or other expiration of this Agreement and any applicable removal periods as described in Section 35, SURRENDER OF PREMISES. Notwithstanding the foregoing, COUNTY acknowledges that the Facility will be operated as an unmanned facility.

14. **NONINTERFERENCE:**

A. Property. LESSEE agrees not to use, nor permit those under its control, including, but not limited to, its employees, tenants, LESSEE'S invitees, agents and/or contractors, to use any portion of the Property, Site, or the Facility in any way which unreasonably interferes with the non-telecommunications use of the Property by COUNTY. Such interference shall be deemed a material breach, and in the event of such interference caused by LESSEE, LESSEE shall terminate said interference promptly upon receipt of written notice from COUNTY. In the event LESSEE fails to stop such interference within forty-eight (48) hours after receipt of such notice, LESSEE shall cease operation of the Facility or remove the interfering equipment until such interference is eliminated.

B. Telecommunications. LESSEE shall meet and comply with all non-interference rules of the Federal Communications Commission (hereinafter "FCC"). Subject to LESSEE'S rights hereunder, LESSEE shall not use, nor shall LESSEE permit its employees, invitees, agents or any others under its control to use the Property or Site in any way which materially interferes with the operations of other telecommunications users on the Property as of the date of execution of this Agreement, nor shall LESSEE at any time after the Commencement Date of this Agreement change the operations of its Facility or alter its Facility in such a manner which causes material interference to COUNTY or any other then-existing users or tenants on the Property as of the date of the change or alteration to the Facility. Such interference shall be deemed a material breach, and in the event of such interference caused by LESSEE, LESSEE shall terminate said interference promptly upon notice from COUNTY. In the event LESSEE fails to stop such interference within forty-eight (48) hours after receipt of such notice, LESSEE shall cease operation of the Facility or remove the interfering equipment until such interference is eliminated. COUNTY agrees that any other tenants of the Property who currently have or in the future take possession of the Property will not be permitted to install new or additional equipment that causes interference to the operation of LESSEE's Facility as of the date of such installation, provided LESSEE is in compliance with this Section.

C. Emergency. In the event of an emergency which threatens bodily harm and involves COUNTY in its governmental capacity and the powering down of LESSEE'S Facility is required to respond to such emergency, COUNTY may require LESSEE to power down its operations at the Site without LESSEE'S consent. COUNTY shall use its best efforts to notify LESSEE as soon as possible of said emergency and COUNTY'S intent to require LESSEE to temporarily terminate its

DocuSign Envelope ID: 79CE0DE1-CBA3-47F9-9288-5A11928C9301

operations. COUNTY shall cooperate with LESSEE in the restoration of use when COUNTY has determined, in COUNTY'S sole and reasonable discretion that the emergency has ended.

D. Equipment Modification. LESSEE shall obtain the written consent of COUNTY, which shall not be unreasonably withheld, conditioned, or delayed, prior to any proposed change in LESSEE'S use of the Site beyond the scope of said specifications in Exhibit "D"; including but not limited to antenna transmission, location or size of the Facility. Notwithstanding the preceding sentence, LESSEE, upon notice to COUNTY, may modify or upgrade its equipment and antennas, so long as such alterations do not increase their level of transmission, or change exterior location or size, or otherwise exceed the limits set forth in Section 4, PURPOSE AND USE, or in Exhibit "D" of this Agreement; without the written consent of COUNTY, which shall not be unreasonably withheld, conditioned, or delayed. LESSEE may remove its radio equipment, antennas, cabling, back up batteries and related equipment at any time.

E. Relocation. COUNTY reserves the one-time right, at any time after the expiration of the Initial Term, to reasonably designate a new location for LESSEE'S Facility and to move said Facility elsewhere on the Property, provided that COUNTY shall give LESSEE at least One Hundred Twenty (120) days written notice of its request to relocate LESSEE'S Facility. The relocation of LESSEE'S Facility shall be done in accordance with the following terms:

(i) The work and labor to relocate LESSEE'S Facility shall be done exclusively by LESSEE or its designated agents, and shall be done at LESSEE's sole cost and expense. The relocation of LESSEE'S Facility shall not result in any interruption of the communications service provided by LESSEE from the Property. The relocation of LESSEE'S Facility shall not impair, or in any manner alter, the quality of communications service provided by LESSEE from the Property. The relocation shall include new access and utility routes as reasonably required by LESSEE'S use of the new location of LESSEE'S Facility. The relocation of LESSEE'S Facility shall be done in accordance with the terms and conditions contained in paragraphs (ii), (iii) and (iv) below.

(ii) COUNTY will exercise its right to relocate LESSEE'S Facility by delivering written notice to LESSEE. In the notice, COUNTY will propose an alternate site on the Property to which LESSEE may relocate its Facility. LESSEE will have sixty (60) days from the date it receives the notice to evaluate the alternate site. If LESSEE fails to approve or disapprove of the alternate site within the 60-day period or fails to request an extension of the review period in writing, then LESSEE will be deemed to have approved such proposed relocation. If LESSEE disapproves of the alternate site, then COUNTY, if practicable, may thereafter propose a new alternate site or a choice of alternate sites by notice to LESSEE in the same manner described above. LESSEE will then have the option to choose one of the new alternate sites within sixty (60) days from the date LESSEE receives notice of the new alternate site, or if none of the alternate sites enable LESSEE to continue its operations in a

DocuSign Envelope ID: 79CE0DE1-CBA3-47F9-9288-5A11928C9301

manner consistent with its operations at the original location of the Site, LESSEE may terminate this Agreement by providing COUNTY with ninety (90) day's written notice. Notwithstanding anything to the contrary contained herein, COUNTY shall use its best efforts to provide an alternate site for its proposed relocation. Any relocation site which COUNTY and LESSEE agree upon in writing is hereinafter referred to as the "Relocation Site". Within thirty (30) days after LESSEE has accepted the Relocation Site, LESSEE shall submit its application for any applicable permits for the Relocation Site and pursue permits expediently until obtained. LESSEE will have a period of ninety (90) days after obtaining its permits for the Relocation Site to relocate LESSEE'S Facility to the Relocation Site and cease operations at the previous Site.

(iii) During the relocation of LESSEE'S Facility to the Relocation Site, LESSEE shall be allowed to install a temporary facility on COUNTY'S Property in a location approved by COUNTY, which approval shall not be unreasonably withheld, conditioned or delayed. Upon completion of the Relocation Site, LESSEE shall promptly remove its temporary facility.

(iv) Upon relocation of LESSEE'S Facility, or any part thereof, to the Relocation Site, this Agreement shall be amended to show the new location. Each party hereby agrees that the Relocation Site (including the access and utility right of way) may be surveyed by a licensed surveyor at the sole cost of LESSEE and such survey shall be included in the lease amendment and become a part thereof and control in describing the Site. Except as expressly provided in this subsection, both parties hereby agree that in no event will the relocation of LESSEE'S Facility under the provisions of Section 14.E, or any part thereof, affect, alter, modify or otherwise change any of the terms and conditions of this Agreement.

15. **UTILITY CHARGES:** LESSEE, upon obtaining the required permits and approvals, shall have the right to install and maintain the necessary mains and ancillary equipment required to bring utility service to the Site and Facility, as described and depicted in Exhibit "C", at its sole cost and expense. All accounts for such utilities shall name LESSEE as the responsible party.

LESSEE shall be responsible for supplying and maintaining all power and utilities necessary for LESSEE's operations at the Site and Facility. LESSEE shall pay when due all charges for utilities used by LESSEE.

16. **TAXES AND ASSESSMENTS:** This Agreement may confer a possessory interest on LESSEE and LESSEE shall pay and discharge any and all property taxes and/or assessments, including special assessments and possessory interest taxes, if any, which, due to LESSEE'S Facility may be levied upon said Property, Facility and/or Site during the Term of this Agreement.

17. **MAINTENANCE AND REPAIR/GRAFFITI REMOVAL:** LESSEE agrees at its sole expense to keep in good maintenance and repair, reasonable wear and tear excepted, the Site and Facility. If LESSEE delays in making any repairs so that it becomes necessary for COUNTY, for sake of the operation of the Property, to make such repairs, then COUNTY shall, after providing the notice required, have the right to do so and use monies from the Security Deposit to pay the cost of such repairs. COUNTY shall not have any responsibility to maintain the Site or Facility, except to the extent such maintenance is required due to COUNTY'S negligence or intentional acts or omissions.

LESSEE shall, within twenty (20) days after receipt of notice from COUNTY, commence to perform maintenance and repair and remove or have removed graffiti from the Facility and Site at its sole expense.

18. **ASSIGNMENT/SUBLEASE/HYPOTHECATION:** LESSEE shall not assign, license, or sublease the Site or any part thereof or any right or privilege appurtenant thereto without COUNTY'S written consent which consent shall not be unreasonably withheld, conditioned or delayed. Notwithstanding the above, upon written notification to COUNTY, LESSEE may assign this Agreement to its parents, partners, or affiliates, or to an entity that purchases all or substantially all of LESSEE'S assets in the FCC market in which the Property is located ("Transferee").

LESSEE shall not mortgage, pledge, hypothecate, or encumber the Property, the Site, or any interest therein, including without limitation its leasehold; nor shall LESSEE mortgage, pledge, hypothecate, or encumber any improvements placed upon the Property or Site whether such improvement is placed thereon before or after the date of execution of this Agreement.

Any attempt to assign, license, sublease, mortgage, pledge, hypothecate or in any other way encumber LESSEE'S rights under this Agreement or LESSEE'S interest in the Site without COUNTY'S consent shall be void and without legal effect.

Upon COUNTY's receipt of written notice of LESSEE's assignment in full to a Transferee of this Agreement or upon COUNTY's consent to any other assignment, LESSEE will be relieved of all future performance, liabilities and obligations under this Agreement to the extent of such assignment.

19. **SUCCESSORS IN INTEREST:** This Agreement and the covenants contained herein shall be binding upon and inure to the benefit of the respective parties, their heirs, personal representatives, successors and assigns and to any organization into which LESSEE may be merged.

20. **INDEMNIFICATION:** LESSEE shall defend, indemnify, and save harmless COUNTY, its officers, agents, and employees, from any and all claims, demands, damages, costs, expenses (including reasonable attorney's fees), judgments, or liabilities arising out of LESSEE's breach of this Agreement or occasioned by any act or omission to act on the part of LESSEE or its agents or employees or other independent contractors directly responsible to LESSEE; except those claims, demands, damages, costs, expenses (including reasonable attorney's fees), judgments or liabilities resulting from the sole negligence or acts or omissions by the COUNTY.

LESSEE shall notify COUNTY in the event of any accident or injury arising out of or in

DocuSign Envelope ID: 79CE0DE1-CBA3-47F9-9288-5A11928C9301

connection with this Agreement within forty-eight (48) hours after LESSEE's actual knowledge of such event.

21. **INSURANCE:** LESSEE shall carry and maintain for the duration of this Agreement insurance against claims for injuries to persons or damages to property which may arise from or in connection with the performance of the work hereunder and the results of that work by LESSEE, its agents, representatives, employees, contractors or subcontractors.

A. Scope of Insurance. Coverage shall be at least as broad as:

1. **Commercial General Liability (CGL):** Insurance Services Office (ISO) Form CG 00 01 covering CGL on an "occurrence" basis, including products-completed operations, personal & advertising injury, with limits of $2,000,000 per occurrence and $2,000,000 in the aggregate.
2. **Automobile Liability**: ISO Form Number CA 00 01 covering any auto (Code 1), or if LESSEE has no owned autos, hired, (Code 8) and non-owned autos (Code 9), with limit of $2,000,000 per accident for bodily injury and property damage.
3. **Workers' Compensation**: as required by the State of California, with Statutory Limits, and Employer's Liability Insurance with limits of $1,000,000 per accident for bodily injury or disease, policy limit.

B. Other Insurance Provisions. The required insurance policies are to contain, or be endorsed to contain, the following provisions:

1. **Additional Insured** – COUNTY, its officers, officials, employees, agents and volunteers are to be covered as additional insureds on the CGL policy by endorsement with respect to liability caused, in whole or in party, by work or operations performed by or on behalf of the LESSEE including materials, parts, or equipment furnished in connection with such work or operations. General liability coverage can be provided in the form of an endorsement to the LESSEE's insurance at least as broad as both CG 20 10 and CG 20 37.
2. **Primary Coverage** – For any claims related to this Agreement, the LESSEE's required insurance coverage shall be primary insurance as respects the COUNTY, its officers, officials, employees, agents and volunteers. Any insurance or self-insurance maintained by the COUNTY, its officers, officials, employees, agents or volunteers shall be excess of the LESSEE's required insurance and shall not contribute with it.
3. **Notice of Cancellation** – LESSEE shall provide at least 30 days prior written notice to the COUNTY of cancellation of any required coverage that is not replaced.
4. **Waiver of Subrogation Rights** – LESSEE hereby grants to COUNTY a waiver of any right to Workers' Compensation subrogation which any insurer of said LESSEE may acquire against the COUNTY by virtue of the payment of any loss under such insurance. LESSEE agrees to obtain any endorsement that may be necessary to effect this waiver of subrogation, but this provision applies regardless of whether or not the

DocuSign Envelope ID: 79CE0DE1-CBA3-47F9-9288-5A11928C9301

COUNTY has received a waiver of subrogation endorsement from the insurer.

5. **Acceptability of Insurers** – Unless otherwise approved by Risk Management, insurance shall be written by insurers eligible to do business in the State of California and with a minimum A.M. Best's Insurance Guide rating of "A- VII".

6. **Verification of Coverage** – LESSEE shall furnish the COUNTY with proof of insurance, original certificates and copies of the endorsements as required by this Agreement. The proof of insurance, certificates and endorsements are to be received by the COUNTY before work commences. However, failure to obtain the required documents prior to the work beginning shall not waive LESSEE's obligation to provide them. LESSEE shall furnish evidence of renewal of coverage throughout the term of the Agreement.

7. **Failure to Procure Coverage** – In the event that any policy of insurance required under this Agreement does not comply with the requirements, is not procured, or is canceled and not replaced, COUNTY has the right but not the obligation or duty to terminate the Agreement. Maintenance of required insurance coverage is a material element of the Agreement and failure to maintain or renew such coverage or to provide evidence of renewal may be treated by COUNTY as a material breach of contract.

8. **Subcontractors** – LESSEE shall endeavor to require and verify that all subcontractors while working hereunder maintain insurance that is reasonable and prudent, and LESSEE shall ensure that COUNTY is an additional insured on insurance required from subcontractors.

9. **Special Risks or Circumstances** – COUNTY reserves the right to modify these requirements, including limits, once per Term or Renewal Term, based on the nature of the risk, prior experience, insurer, coverage, or other special circumstances.

10. Notwithstanding the foregoing, LESSEE may, in its sole discretion, self insure any of the required insurance under the same terms as required by this Agreement. In the event LESSEE elects to self insure its obligation under this Agreement to include COUNTY as an additional insured, the following conditions apply: (i) COUNTY shall promptly and no later than thirty (30) days after notice thereof provide LESSEE with written notice of any claim, demand, lawsuit, or the like for which it seeks coverage pursuant to this Section and provide LESSEE with copies of any demands, notices, summonses, or legal papers received in connection with such claim, demand, lawsuit, or the like; (ii) COUNTY shall not settle any such claim, demand, lawsuit or the like without the prior written consent of LESSEE; and (iii) COUNTY shall reasonably cooperate with LESSEE in the defense of the claim, demand, lawsuit, or the like.

Except for indemnification pursuant to Section 20, INDEMNIFICATION, and Section 23, ENVIRONMENTAL IMPAIRMENT, neither party shall be liable to the other, or any of their respective agents, representatives, and employees, for any lost revenue, lost profits, loss of technology, rights or services, incidental, punitive, indirect, special or consequential damages,

DocuSign Envelope ID: 79CE0DE1-CBA3-47F9-9288-5A11928C9301

loss of data, or interruption or loss of use of service, even if advised of the possibility of such damages, whether under theory of contract, tort (including negligence), strict liability or otherwise.

Any change requiring additional types of insurance coverage or higher coverage limits must be made by amendment to this Agreement. LESSEE agrees to execute any such mutually agreeable amendment within thirty (30) days of receipt.

Any failure, actual or alleged, on the part of COUNTY to monitor or enforce compliance with any of the insurance and indemnification requirements will not be deemed as a waiver of any rights on the part of COUNTY.

22. **NONDISCRIMINATION:** LESSEE shall comply with COUNTY laws, rules and regulations regarding nondiscrimination as such are found in the Santa Barbara Code and as such may from time to time be amended. These provisions are incorporated herein as if they were fully set forth.

LESSEE's noncompliance with provisions of this section shall constitute a material breach of this Agreement and in addition to any other remedies provided by law, COUNTY shall have the right to terminate this Agreement and the interest hereby created without liability therefore.

23. **ENVIRONMENTAL IMPAIRMENT:** LESSEE shall comply with all applicable laws, regulations, rules, and orders regardless of when they become or became effective, including without limitation those relating to construction, grading, signing, health, safety, noise, environmental protection, waste disposal, water and air quality, and shall furnish satisfactory evidence of compliance upon request of COUNTY.

Should any discharge, leakage, spillage, emission, or pollution of any type occur upon or from the Property, Facility or Site due to LESSEE'S use and occupancy, LESSEE shall clean all property affected to the reasonable satisfaction of COUNTY and any governmental body having jurisdiction therefore. LESSEE shall indemnify, hold harmless, and defend COUNTY from and against all liability, claim, cost, and expense (including without limitation any fines, penalties, judgments, litigation costs, reasonable attorney's fees, and consulting engineering and construction costs) incurred by COUNTY as a result of LESSEE'S breach of this section, or as a result of any such discharge, leakage, spillage, emission or pollution due to LESSEE'S use and occupancy, regardless of whether such liability, cost or expense arises during or after the Term of this Agreement, except to the extent caused by the sole negligence or willful misconduct of COUNTY. COUNTY agrees to hold harmless and indemnify LESSEE from, and to assume all duties, responsibilities and liabilities at the sole cost and expense of COUNTY for, payment of penalties, sanctions, forfeitures, losses, costs or damages, and for responding to any claims, to the extent arising from subsurface or other contamination of the Property with hazardous substances prior to the effective date of this Agreement or from such contamination caused by the acts or omissions of the COUNTY during the Term.

LESSEE agrees that during all maintenance on the Property by COUNTY, while following the procedures and guidelines set forth by the Occupational Safety and Health Administration (OSHA) and the FCC implementing the National Environmental Policy Act of 1969, when

DocuSign Envelope ID: 79CE0DE1-CBA3-47F9-9288-5A11928C9301

continuing transmission is deemed unsafe for COUNTY personnel due to radiation (based upon standards promulgated by a federal or state governmental authority having jurisdiction over LESSEE), the affected transmitters of LESSEE will be turned off during such maintenance for so long as the unsafe condition exists. The earliest practicable notice will be given to LESSEE using the information in Section 26, NOTICES.

24. **TOXICS:** LESSEE shall not manufacture or generate hazardous wastes on or in the Facility, Site, Property, or surrounding property unless specifically authorized by this Agreement. LESSEE shall be fully responsible for any hazardous wastes, substances or materials as defined under federal, state or local law, regulation, or ordinance that are manufactured, generated, used, placed, disposed, stored, or transported by LESSEE, its agents, employees, or designees on or in the Facility, the Site, Property, or surrounding property during the Term of this Agreement and shall comply with and be bound by all applicable provisions of such federal, state, or local law, regulation, or ordinance dealing with such wastes, substances, or materials. LESSEE shall notify COUNTY and the appropriate governmental emergency response agency (ies) immediately in the event of any release or threatened release of any such wastes, substances or materials by LESSEE.

25. **COMPLIANCE WITH THE LAW:** LESSEE agrees to comply with all federal, state and local laws, orders, rules and regulations ("**Laws**") applicable to LESSEE's use of the Facility on the Property. COUNTY agrees to comply with all Laws relating to COUNTY'S ownership and use of the Property and any improvements on the Property.

26. **NOTICES:** Any notice to be given to the parties shall be in writing and shall be served, either personally or by mail, to the following:

COUNTY: County of Santa Barbara
General Services Department
1105 Santa Barbara Street
Santa Barbara, CA 93101
Attn: Real Property Manager
(805) 568-3070
realproperty@countyofsb.org

LESSEE: New Cingular Wireless, LLC
Re: Cell Site No.: CSL04176
Fixed Asset No. 10581720
1025 Lenox Park Blvd. NE
Atlanta, GA 30319
Attn: Network Real Estate
(877) 231-5447

With a copy to:

New Cingular Wireless, LLC

DocuSign Envelope ID: 79CE0DE1-CBA3-47F9-9288-5A11928C9301

003918

AT&T Legal Department – Network Operations
Attn: Network Counsel
Re: Cell Site No.: CSL04176
Fixed Asset No. 10581720
208 South Akard Street
Dallas, TX 75202-4206

or to the parties at such other place as may be designated in writing. Such notices shall be served by depositing them addressed as set out above, postage prepaid, in the U.S. mail, reliable overnight courier, or by personal delivery. The date of delivery or refusal of delivery shall constitute the date of service. The telephone numbers included in this Section are for reference only and a phone call does not constitute official notice when such notice is required by this Agreement.

27. **DEFAULT:** Except as otherwise required herein, should LESSEE at any time fail to comply with any covenant contained herein, then LESSEE shall be in Default and COUNTY shall give written notice to LESSEE specifying the particulars of the Default and LESSEE shall promptly commence remedial action to cure the Default. Should such Default continue uncured for a period of thirty (30) calendar days from such notice, this Agreement shall terminate at the option of the COUNTY; unless the cure of a non-monetary Default shall reasonably take more than thirty (30) calendar days in which case LESSEE shall proceed with all due speed to cure the Default and shall have a reasonable time to effectuate its cure. Except as otherwise required herein, should COUNTY at any time fail to comply with any covenant contained herein, LESSEE shall give written notice to COUNTY specifying the particulars of the Default and COUNTY shall promptly commence remedial action to cure the Default. Should such Default continue uncured for a period of thirty (30) calendar days from such notice, this Agreement shall terminate at the option of the LESSEE; unless the cure of the Default shall reasonably take more than thirty (30) calendar days in which case COUNTY shall proceed with all due speed to cure the Default and shall have a reasonable time to effectuate its cure.

28. **REMEDIES:** In the event of a Default or breach, either party may exercise any right or remedy at law or in equity which such party may have by reason of such Default including but not limited to the following:

A. Waive the Default in accordance with Section 29, WAIVER, herein below.
B. Maintain this Agreement in full force and effect and recover whatever monetary loss (es) may have resulted from such Default.
C. Terminate the Agreement in accordance with Section 31, TERMINATION.

29. **WAIVER:** It is understood and agreed that any waiver, express or implied of any term of this Agreement shall neither waive, nor be construed to waive the subsequent enforcement of any other term of this Agreement or any subsequent Default under Section 27, DEFAULT.

30. **AMENDMENTS:** This Agreement may only be amended by written consent of the parties and such changes shall be binding upon the heirs or successors of the parties.

DocuSign Envelope ID: 79CE0DE1-CBA3-47F9-9288-5A11928C9301

31. **TERMINATION:** This Agreement shall terminate and all rights of LESSEE shall cease and LESSEE shall quietly and peacefully deliver to COUNTY, possession and interest in the Site:

A. Upon expiration or earlier termination of the Agreement as provided in Section 5, TERM; or

B. After making all reasonable and good faith efforts to obtain applicable certificates, permits and approvals, if any of LESSEE'S applications for applicable certificates, permits and other approvals issued to LESSEE is canceled, expires, lapses, or is otherwise withdrawn or terminated by governmental authority so that LESSEE will no longer be able to use the Site for its intended purposes or the LESSEE reasonably and in good faith determines that the Site is no longer economically or technologically feasible for its intended use. Such termination shall be effective upon written notice to COUNTY in writing by certified mail, return receipt requested, and shall be effective upon receipt of such notice by COUNTY; provided, however, that LESSEE must provide COUNTY with 12 months written notice of its intention to terminate this Agreement for economic or technological reasons; or

C. In accordance with Section 41, CONDEMNATION; or

D. If LESSEE is adjudged bankrupt, in accordance with Section 42, BANKRUPTCY.

This Agreement may also terminate:

AA. At LESSEE's option in accordance with Subsection 14.E, "Relocation"; or

BB. At COUNTY's option if LESSEE fails to comply with COUNTY laws, rules and regulations regarding nondiscrimination as provided in Section 22, NONDISCRIMINATION; or

CC. At the option of the nondefaulting party at the end of the cure period in accordance with Section 27, DEFAULT; or

DD. At the option of either party in accordance with Section 32, DESTRUCTION.

Upon termination of this Agreement pursuant to Section 31, TERMINATION, all rights of LESSEE to the Site shall cease and LESSEE shall quietly and peacefully deliver to COUNTY, possession and interest in the Site in accordance with Section 35, SURRENDER OF PREMISES.

32. **DESTRUCTION:** If the Facility or the Site is partially or totally destroyed by fire or other casualty, this Agreement, at the option of COUNTY or LESSEE, shall terminate.

33. **HOLDING OVER:** Should LESSEE occupy the Site after the expiration date of this Agreement or any extension thereof, with the consent of the COUNTY, expressed or implied, such possession shall be construed to be a tenancy from month to month and LESSEE shall pay COUNTY for such tenancy at the monthly rental rate in effect on the expiration date.

34. **AGENCY DISCLOSURE:** LESSEE acknowledges that the General Services Department, Facilities Services Division, of the COUNTY is the agent for the COUNTY exclusively, and is neither the agent for LESSEE nor a dual agent in this transaction.

DocuSign Envelope ID: 79CE0DE1-CBA3-47F9-9288-5A11928C9301

35. **SURRENDER OF PREMISES:** Upon expiration or termination of this Agreement, LESSEE shall vacate and surrender possession of, and any claim to the Site, leaving it in good condition, except for ordinary wear and tear.

Notwithstanding the foregoing and subject to Section 12, TITLE TO FACILITY, LESSEE shall remove LESSEE'S Owned Facilities up to five (5) feet below grade within sixty (60) days prior to the date of such expiration or within sixty (60) days after the earlier termination of this Agreement and LESSEE shall retain title to LESSEE'S Owned Facilities. Alternatively, upon such expiration or termination, COUNTY may request in writing at least ninety (90) days prior to such expiration or within ninety (90) days after the earlier termination of this Agreement the removal of the Facility up to five (5) feet below grade, in whole or in part, and if COUNTY so requests, LESSEE shall remove or have said Facility (including LESSEE'S Owned Facilities) or such lesser portions as COUNTY may request removed as soon as is practicable, at LESSEE'S sole cost.

Upon completion of LESSEE'S removal of its Facility, LESSEE shall obtain COUNTY's approval, not to be unreasonably withheld, conditioned or delayed, that said Facility has been removed and the Site restored to good condition.

36. **CAPTIONS:** The title or headings to the sections of this Agreement are not a part of this Agreement, and shall have no effect upon the construction or interpretation of any part hereof.

37. **SEVERABILITY:** If any one or more of the provisions contained herein shall for any reason be held to be invalid, illegal, or unenforceable in any respect, then such provision or provisions shall be deemed severable from the remaining provisions hereof, and such invalidity, illegality, or unenforceability shall not affect any other provision hereof, and this Agreement shall be construed as if such invalid, illegal, or unenforceable provision had never been contained herein.

38. **CERTIFICATION OF SIGNATORY:** The signatories of this Agreement and each of them represent and warrant that they are authorized to execute this Agreement and that no additional signatures are required to bind COUNTY and LESSEE to its terms and conditions or to carry out duties contemplated herein.

39. **PERMITTED PERSONNEL:** LESSEE shall be solely liable for all actions of its agents, employees, contractors, subcontractors, and any others it permits on the Property or Site and shall be responsible for any and all damages resulting from their actions.

40. **FIRE DAMAGE:** LESSEE agrees to hold COUNTY harmless and indemnify COUNTY from any damage or injury to COUNTY, other persons or to property resulting from any fire caused by LESSEE, its agents, employees, or permittees, except to the extent such fire is caused by the sole acts or omissions of COUNTY.

41. **CONDEMNATION:** In the event the Property or any part thereof is taken by condemnation, eminent domain, or any such proceeding that precludes access to or use of the Site, COUNTY shall have the exclusive right to control the defense of any such action in condemnation

DocuSign Envelope ID: 79CE0DE1-CBA3-47F9-9288-5A11928C9301

or eminent domain and to defend any such action and settle the same in COUNTY'S absolute discretion. LESSEE agrees that COUNTY shall have the right, but not the obligation, to defend or settle any such action in condemnation or eminent domain affecting any of LESSEE'S installations at the Site.

LESSEE shall receive from COUNTY such proportionate amount of the judgment, award, or settlement as shall be attributable to LESSEE'S interests.

In the event that full or partial possession of the Site is obtained by a public agency or other agency empowered to take by eminent domain, in a manner which precludes LESSEE'S intended use, this Agreement shall terminate as of the effective date of possession and upon such termination, any obligation of LESSEE to pay Rent shall cease with the payment of the prorated portion of rental obligations up to said termination date. Any prepaid Rent shall be returned to LESSEE from the effective date of termination.

In the event of a partial taking, this Agreement may continue at COUNTY'S option and with the consent of LESSEE, however, Rent hereunder may be reduced proportionately.

42. **BANKRUPTCY:** If LESSEE is adjudged bankrupt, this Agreement shall immediately terminate and the same shall not be treated as an asset of LESSEE after such adjudication, nor shall it pass to the control of any trustee or assignee of LESSEE by virtue of any process in bankruptcy or insolvency by execution or attachment.

43. **CONSTRUCTION:** The parties to this Agreement agree that each party and its respective counsel have reviewed and approved this Agreement to the extent that each party in its sole discretion has desired, and that any rule of construction to the effect that ambiguities are to be resolved against the drafting party shall not apply in the interpretation of this Agreement. The terms and conditions of this Agreement embody the parties' mutual intent, and this Agreement shall not be construed more liberally in favor of, nor more strictly against any party hereto.

44. **FACSIMILE SIGNATURES:** In the event that the parties hereto utilize facsimile transmitted documents which include signatures, such documents shall be accepted as if they bore original signatures provided that documents bearing ORIGINAL SIGNATURES are provided within seventy-two (72) hours of transmission of the facsimile, except that funds shall not be released upon a facsimile signature nor shall facsimile signed documents be accepted for recordation by the Clerk Recorder of the County.

45. **EXECUTION IN COUNTERPARTS:** This Agreement may be executed in any number of counterparts and each such counterpart shall for all purposes be deemed to be an original; and all such counterparts, or as many of them as the parties shall preserve undestroyed, shall together constitute one and the same instrument.

46. **ENTIRE AGREEMENT:** The parties to this Agreement intend that their negotiations, conversations and statements made prior to execution of this Agreement are fully integrated and expressed herein, and no such negotiations, conversations, and statements shall be deemed to create rights or obligations other than those stated herein.

[SIGNATURE PAGE FOLLOWS]

DocuSign Envelope ID: 79CE0DE1-CBA3-47F9-9288-5A11928C9301

Project:	AT&T at Vandenberg Hills Little League
APN:	097-371-051 (Portion)
Folio:	003918
Agent:	JJS

IN WITNESS WHEREOF, COUNTY and LESSEE have executed this Agreement by the respective authorized officers as set forth below to be effective as of the date executed by COUNTY.

"COUNTY"
COUNTY OF SANTA BARBARA

By: _____
Name: _____
Title: Chair, Board of Supervisors

Date: _____

ATTEST:
MONA MIYASATO
CLERK OF THE BOARD

By: _____
Deputy

APPROVED AS TO ACCOUNTING:
BESTY M. SCHAFFER, CPA, CPFO
AUDITOR-CONTROLLER

DocuSigned by:
By: _____
B9D7C9FF7A414AE...
Deputy

APPROVED AS TO FORM:
MICHAEL C. GHIZZONI
COUNTY COUNSEL

DocuSigned by:
By: _____
D0A627A89DD64A5...
Deputy

APPROVED:

DocuSigned by:
Carlo Achdjian
C58AFD92814A4CA...
Carlo Achdjian, Manager
Real Estate Services Division

"LESSEE"
New Cingular Wireless PCS, LLC,
a Delaware limited liability company

By: Misty Snowden
Name: Misty Snowden
Title: Area Manager
Date: 3/26/21

APPROVED AS TO INSURANCE FORM:

DocuSigned by:
Ray Aromatorio
D3DB8528E16F47F...
Ray Aromatorio, ARM, AIC
Risk Program Administrator

DocuSign Envelope ID: 79CE0DE1-CBA3-47F9-9288-5A11928C9301

"PROPERTY"
Exhibit "A"

"SITE"
Exhibit "B"

"ARCHITECTURAL PLANS"
Exhibit "C"

"EQUIPMENT AND ANTENNA SPECIFICATIONS"
Exhibit "D"

"LAND USE PERMITS"
Exhibit "E"

EXHIBIT A

SCALE NOTE:
IF DIMENSIONS SHOWN ON PLAN DO NOT SCALE CORRECTLY, CHECK FOR REDUCTION OR ENLARGEMENT FROM ORIGINAL PLANS.

NOTES:
1. POWER DESIGN AND RUN IS PRELIMINARY PENDING FINAL DESIGN FROM UTILITY PROVIDERS.
2. UNDERGROUND WATER LINE NOT ABLE TO BE LOCATED IN FIELD SURVEY USING GROUND PENETRATING RADAR. VERIFY IN FIELD BEFORE START OF TRENCHING.

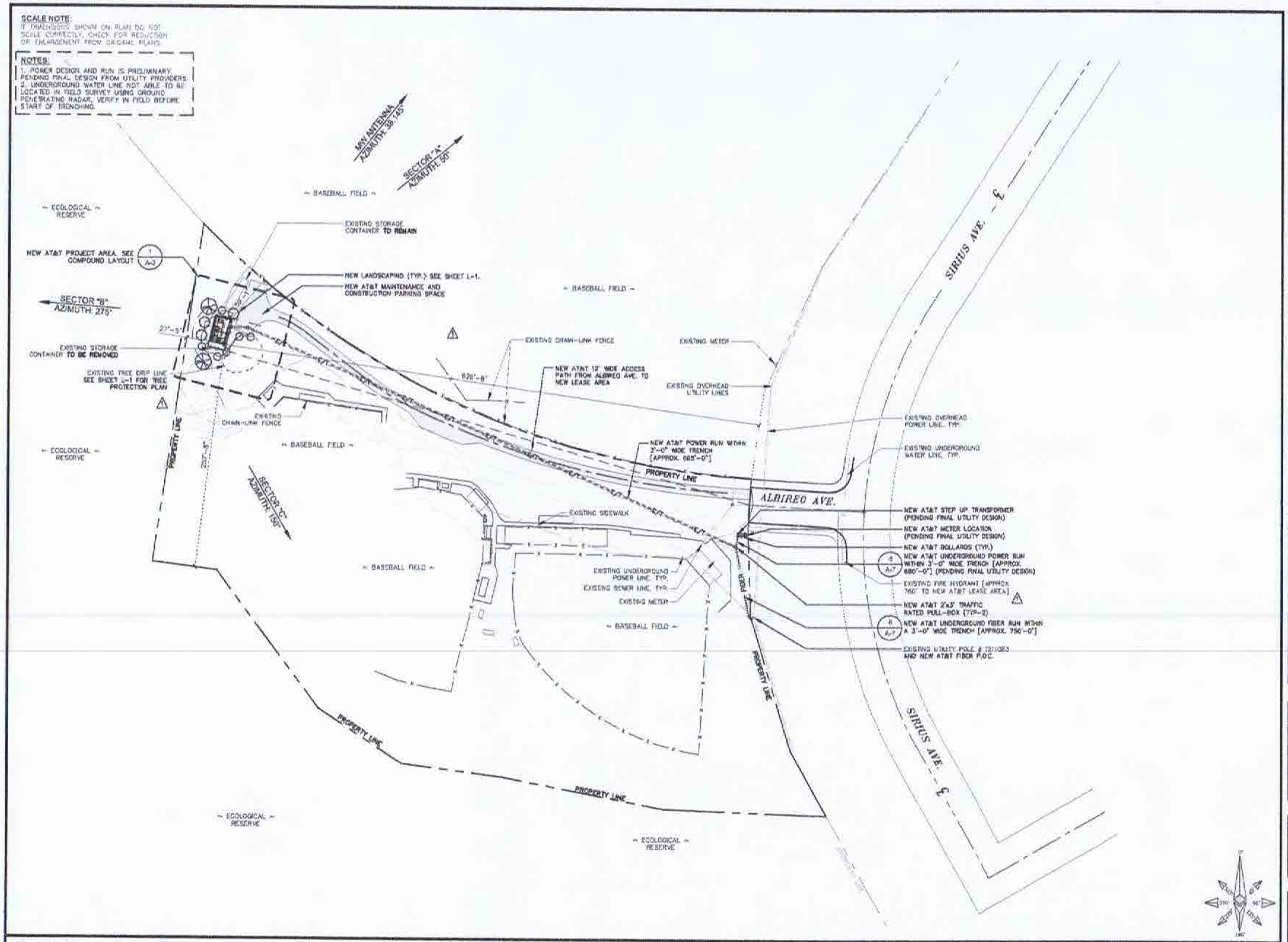

SITE PLAN

1

APPLICANT

The NEW at&t
1452 EDINGER AVE., 3RD FLOOR
TUSTIN, CA 92780

ENGINEER

Eukon
an SFC Communications, Inc. Company
65 POST, SUITE 1000
IRVINE, CA 92618
TEL: (949) 553-8566
www.eukongroup.com

DRAWN BY:	AG
CHECKED BY:	AG

REVISIONS

REV	DATE	DESCRIPTION
0	11/10/20	100% CONSTRUCTION DRAWING
A	11/03/20	90% CONSTRUCTION DRAWING

LICENSEE

DATE SIGNED: 11-10-20

PROJECT INFORMATION

CSL04176
300 ALBIREO AVE.
LOMPOC, CA 93436

SHEET TITLE

SITE PLAN

SHEET NUMBER

A-1

EXHIBIT B

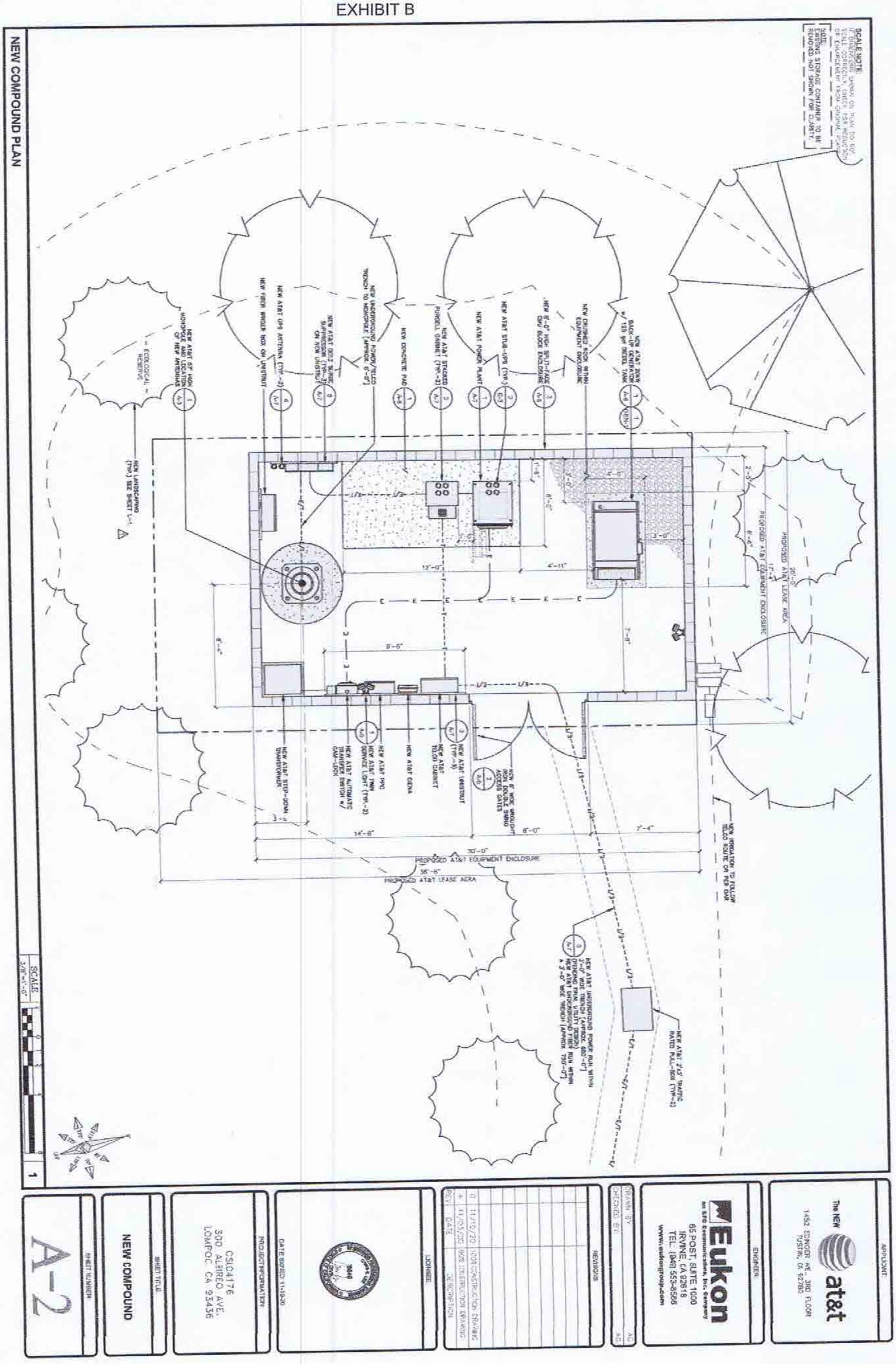
NEW COMPOUND PLAN
SCALE NOTE:
NOTE: EXISTING STORAGE CONTAINER TO BE REMOVED-NOT SHOWN FOR CLARITY.
NEW AT&T 20KW BACK-UP GENERATOR w/ 125 gal DIESEL TANK
NEW CRUSHED ROCK WITHIN EQUIPMENT ENCLOSURE
NEW 8'-0" HIGH SPLIT-FACE CMU BLOCK ENCLOSURE
NEW AT&T STUB-UPS (TYP.)
NEW AT&T POWER PLANT
NEW AT&T STACKED PURCELL CABINET (TYP.-2)
NEW CONCRETE PAD
NEW UNDERGROUND POWER/TELCO TRENCH TO MONOPOLE (APPROX. 6'-0")
NEW AT&T DC12 SURGE SUPPRESSOR (TYP.-3) ON NEW UNISTRUT
NEW AT&T GPS ANTENNA (TYP.-2)
NEW FIBER WINDER BOX ON UNISTRUT
NEW AT&T 54' HIGH MONOPOLE AND LOCATION OF NEW ANTENNAS
NEW LANDSCAPING (TYP.) SEE SHEET L-1
ECOLOGICAL RESERVE
PROPOSED AT&T EQUIPMENT ENCLOSURE
PROPOSED AT&T LEASE AREA
NEW AT&T STEP-DOWN TRANSFORMER
NEW AT&T AUTOMATIC TRANSFER SWITCH w/ GAM-LOCK
NEW AT&T INWN SERVICE LIGHT (TYP.-2)
NEW AT&T FIPC
NEW AT&T CIENA
NEW AT&T TELCO CABINET
NEW AT&T UNISTRUT (TYP.-5)
NEW 6' WIDE WROUGHT IRON DOUBLE SWING ACCESS GATES
NEW IRRIGATION TO FOLLOW TELCO ROUTE OR PER OWR
NEW AT&T UNDERGROUND POWER RUN WITHIN 3'-0" WIDE TRENCH (APPROX. 600'-0") (PERMORE FROM UTILITY DESIGN)
NEW AT&T UNDERGROUND FIBER RUN WITHIN A 3'-0" WIDE TRENCH (APPROX. 750'-0")
NEW AT&T 2'x3' TRAFFIC RATED PULL-BOX (TYP.-2)
SCALE 3/8"=1'-0"
APPLICANT
The NEW at&t
1452 EDINGER AVE., 3RD FLOOR TUSTIN, CA 92780
ENGINEER
Eukon
an SFG Communications, Inc. Company
65 POST, SUITE 1000 IRVINE, CA 92618
TEL: (949) 553-8588
www.eukongroup.com
DRAWN BY AC
CHECKED BY AC
REVISIONS
REV DATE DESCRIPTION
0 11/12/20 100% CONSTRUCTION DRAWING
A 11/23/20 90% CONSTRUCTION DRAWING
LICENSEE
DATE SIGNED 11-19-20
PROJECT INFORMATION
CSLC4176
300 ALBIREO AVE.
LOMPOC CA 93436
SHEET TITLE
NEW COMPOUND
SHEET NUMBER
A-2

EXHIBIT C

THE FOLLOWING PARTIES HEREBY APPROVE AND ACCEPT THESE DOCUMENTS & AUTHORIZE THE SUBCONTRACTOR TO PROCEED WITH THE ZONING DESIGN SET FORTH. ALL DOCUMENTS ARE SUBJECT TO REVIEW BY THE LOCAL BUILDING DEPARTMENT & MAY IMPOSE CHANGES OR MODIFICATIONS.

APPROVED BY:	INITIALS:	DATE:
AT&T RF ENGINEER:		
AT&T OPERATIONS:		
SITE ACQUISITION MANAGER:		
PROJECT MANAGER:		
ZONING VENDOR:		
LEASING VENDOR:		
ZONING MANAGER:		
A/E MANAGER:		
PROPERTY OWNER:		

APPROVALS

ALL WORK AND MATERIALS SHALL BE PERFORMED AND INSTALLED IN ACCORDANCE WITH THE CURRENT EDITIONS OF THE FOLLOWING CODES AS ADOPTED BY THE LOCAL GOVERNING AUTHORITIES. NOTHING IN THESE PLANS IS TO BE CONSTRUCTED TO PERMIT WORK NOT CONFORMING TO THESE CODES.

1. 2019 CALIFORNIA ADMINISTRATIVE CODE
2. 2019 CALIFORNIA BUILDING CODE
3. 2019 CALIFORNIA ELECTRIC CODE
4. 2019 CALIFORNIA MECHANICAL CODE
5. 2019 CALIFORNIA PLUMBING CODE
6. 2019 CALIFORNIA FIRE CODE
7. ANY LOCAL BUILDING CODE AMENDMENTS TO THE ABOVE
8. CITY/COUNTY ORDINANCES

HANDICAP REQUIREMENTS:

FACILITY IS UNMANNED AND NOT FOR HUMAN HABITATION AND IS EXEMPT FROM ACCESSIBILITY REQUIREMENTS IN ACCORDANCE WITH 2019 CALIFORNIA BUILDING CODE SECTION 11B-203.5

ENGINEERING

PROPERTY OWNER: ADDRESS:	COUNTY OF SANTA BARBARA 300 ALBIREO AVE LOMPOC, CA 93436
APPLICANT: ADDRESS:	AT&T 1452 EDINGER AVENUE TUSTIN, CA 92780
APPLICANT REPRESENTATIVE: ADDRESS:	EUKON GROUP 650 S. GRAND, SUITE 101 SANTA ANA, CA 92705
LATITUDE (NAD 83):	34° 42' 33.35" N (34.709264)
LONGITUDE (NAD 83):	120° 29' 32.52" W (-120.425700)
LONGITUDE/LATITUDE TYPE:	NAD 83
GROUND ELEVATION (NAVD 88):	375' AMSL
APN #:	097-371-051
ZONING JURISDICTION:	—
OCCUPANCY:	U
PROPOSED USE:	UNMANNED TELECOMMUNICATIONS FACILITY
CONSTRUCTION TYPE:	V-B
LEASE AREA:	±740 SQ. FT.

SITE INFORMATION

PROJECT MANAGER:
AT&T
1452 EDINGER AVE., 3RD FLOOR
TUSTIN, CA 92780
CONTACT: GUNAN NAGH
PHONE: (562) 650-5681
EMAIL: gn8327@att.com

ENGINEER:
EUKON
65 POST, SUITE 1000
IRVINE, CA 92618
CONTACT: CALVIN DOUGH
PHONE: (949) 235-9164
EMAIL: calvin.dough@eukongroup.com

SITE ACQUISITION:
EUKON
65 POST, SUITE 1000
IRVINE, CA 92618
CONTACT: JORDY AMBROSE
PHONE: (808) 657-7407
EMAIL: jambrose@eukongroup.com

ZONING:
EUKON
65 POST, SUITE 1000
IRVINE, CA 92618
CONTACT: JORDY AMBROSE
PHONE: (808) 657-7407
EMAIL: jambrose@eukongroup.com

RF ENGINEER:
AT&T
1452 EDINGER AVENUE, 3RD FLOOR
TUSTIN, CA 92780
CONTACT: SANDEEP NAWADE
PHONE: (562) 940-4201
EMAIL: sn2840@att.com

CONSTRUCTION:
QUALTEK WIRELESS
10 PASTEUR, SUITE 150
IRVINE, CA 92618-3815
CONTACT: EDDIE HERNANDEZ
PHONE: (951) 928-3949
EMAIL: edhernandez@qualtekwireless.com

PROJECT TEAM

SITE NUMBER: CSL04176

PACE#: MRLOS050508
FA#: 10581720
USID#: 219238

811 Know what's below. Call before you dig.

TO OBTAIN LOCATION OF PARTICIPANTS UNDERGROUND FACILITIES BEFORE YOU DIG IN CALIFORNIA (SOUTH), CALL 811 ALERT TOLL FREE: 1-800-422-4133 OR WWW.DIGALERT.ORG CALIFORNIA STATUTE REQUIRES MIN OF 2 WORKING DAYS NOTICE BEFORE YOU EXCAVATE

at&t

PROJECT: NEW SITE BUILD
SITE TYPE: RAWLAND
SITE ADDRESS: 300 ALBIREO AVE.
LOMPOC, CA 93436

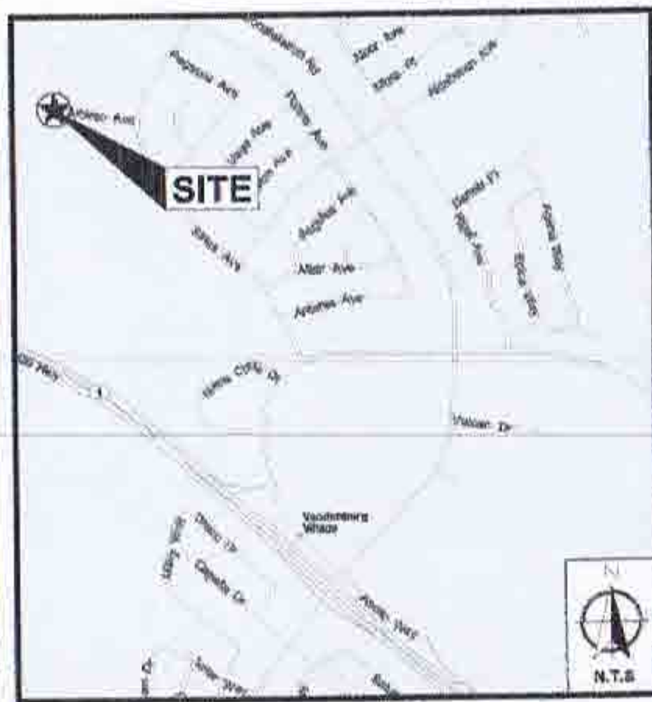

VICINITY MAP

AERIAL MAP

THE FACILITY IS UNMANNED AND NOT FOR HUMAN HABITATION. A TECHNICIAN WILL VISIT THE SITE AS REQUIRED FOR ROUTINE MAINTENANCE. THE PROJECT WILL NOT RESULT IN ANY SIGNIFICANT DISTURBANCE OR EFFECT ON DRAINAGE, NO SANITARY SEWER SERVICE, POTABLE WATER, OR TRASH DISPOSAL IS REQUIRED AND NO COMMERCIAL SIGNAGE IS NEW.

GENERAL NOTES

SUBCONTRACTOR SHALL VERIFY ALL PLANS & EXISTING DIMENSIONS & CONDITIONS ON THE JOB SITE & SHALL IMMEDIATELY NOTIFY THE ENGINEER IN WRITING OF ANY DISCREPANCIES BEFORE PROCEEDING WITH THE WORK OR BE RESPONSIBLE FOR SAME.

DO NOT SCALE DRAWINGS

DIRECTIONS FROM AT&T OFFICE:

HEAD NORTHEAST TOWARD EDINGER AVE. TURN RIGHT ONTO EDINGER AVE. TURN RIGHT ONTO RED HILL AVE. TURN RIGHT ONTO VALENCIA AVE. TURN RIGHT ONTO NEWPORT AVE. TURN LEFT TO MERGE ONTO CA-55 N. TAKE EXIT 108 TO MERGE ONTO I-5 N. TOWARDS LOS ANGELES. MERGE ONTO US-101 N. HEAD NORTH ON US-101 TOWARDS SANTA BARBARA. MERGE ONTO SR-246 W. HEAD WEST ON SR-246 TOWARDS LOMPOC. TURN RIGHT ONTO PONSONBY RD. HEAD NORTHWEST. MERGE ONTO US-1 (CABRILLO HWY) N. EXIT ARGUELLO WAY. CONTINUE STRAIGHT ON APOLLO WAY. TURN LEFT ONTO ORIUS AVE. TURN LEFT ONTO ALBIREO AVE. ARRIVE AT 300 ALBIREO AVE. FOLLOW DIRT ACCESS ROAD TO DEAD END.

DRIVING DIRECTIONS

AT&T WIRELESS PROPOSES TO INSTALL A WIRELESS COMMUNICATIONS FACILITY. THE SCOPE WILL CONSIST OF THE FOLLOWING:

OUTDOOR EQUIPMENT

- (1) NEW 57' HIGH AT&T MONOPOLE
- (12) NEW PANEL ANTENNAS
- (15) NEW REMOTE RADIO UNITS (RRUS)
- (3) NEW DC9 SURGE SUPPRESSORS
- (3) NEW DC12 SURGE SUPPRESSORS
- (1) NEW 6' MICROWAVE ANTENNA
- (2) NEW GPS ANTENNA
- (1) NEW POWER PLANT
- (2) NEW PURCELL CABINETS
- (1) NEW RFC
- (1) NEW AUTOMATIC TRANSFER SWITCH w/ CAM-LOCK
- (1) TELCO BOX
- (1) NEW GENA
- (2) NEW SURVICE LIGHTS
- (1) NEW 20kW BACK-UP GENERATOR w/ 125 gal DIESEL TANK WITHIN NEW LEASE AREA
- (1) NEW 8'-0" HIGH GMG ENCLOSURE
- (1) NEW 8'-0" HIGH DOUBLE SWINGING WROUGHT IRON ACCESS GATE
- (1) UTILITY TRENCH
- (2) TRAFFIC RATED 2'x3' PULL BOXES

PROJECT DESCRIPTION

IF USING 11"X17" PLOT, DRAWINGS WILL BE HALF SCALE

CONSTRUCTION DRAWING

SHEET	DESCRIPTION	REV
T-1	TITLE SHEET	0
T-2	GENERAL NOTES, LEGEND AND ABBREVIATIONS	0
T-3	GENERAL SIGNAGE	0
T-4	STATEMENT OF SPECIAL INSPECTION	0
LS-1	SITE SURVEY	A
LS-2	OVERALL SURVEY	A
A-1	KEY PLAN AND SITE PLAN	0
A-2	NEW COMPOUND AND EQUIPMENT PLAN	0
A-3	ANTENNA AND RRU SCHEDULE/ANTENNA LAYOUT	0
A-4	NEW SOUTHEAST ELEVATION	0
A-5	NEW SOUTHWEST ELEVATION	0
A-6	EQUIPMENT SPECIFICATIONS	0
A-7	EQUIPMENT SPECIFICATIONS	0
A-8	EQUIPMENT SPECIFICATIONS	0
A-9	EQUIPMENT SPECIFICATIONS	0
GEN-1	GENERATOR SPECIFICATIONS	0
GEN-2	GENERATOR SPECIFICATIONS	0
GEN-3	GENERATOR SPECIFICATIONS	0
E-1	ELECTRICAL SITE PLAN	0
E-2	SINGLE-LINE DIAGRAM/AC PANEL SCHEDULE	0
E-3	ELECTRICAL NOTES AND DETAILS	0
E-4	PANEL SCHEDULE	0
G-1	EQUIPMENT GROUNDING PLAN	0
G-2	EQUIPMENT GROUNDING PLAN	0
G-3	GROUNDING DETAILS	0
G-4	GROUNDING DETAILS	0
G-5	GROUNDING DETAILS	0
FD-1	BATTERY NOTES AND FIRE INFORMATION	0
L-1	PLANTING PLAN	0
L-2	IRRIGATION PLAN	0
L-3	PLANTING DETAILS, SPECIFICATIONS AND NOTES	0
L-4	IRRIGATION DETAILS, SPECIFICATIONS AND NOTES	0
C1.0	COVER SHEET	A
C2.0	ACCESS DRIVE PLAN AND PROFILE	A
C2.1	ACCESS DRIVE PLAN AND PROFILE	A
C3.0	EROSION CONTROL	A
C3.1	EROSION CONTROL DETAILS	A
	TOWER DRAWINGS	
MP-1	TITLE SHEET	0
MP-2	NOTES & SPECIFICATIONS	0
MP-3	ELEVATION VIEWS	0
MP-4	DETAILS	0
MP-5	ANTENNA MOUNT DETAILS	0
MP-6	FOUNDATION	0

SHEET INDEX

APPLICANT

The NEW at&t
1452 EDINGER AVE., 3RD FLOOR
TUSTIN, CA 92780

ENGINEER

Eukon
an SFC Communications, Inc. Company
65 POST, SUITE 1000
IRVINE, CA 92618
TEL: (949) 553-8566
www.eukongroup.com

DRAWN BY:	AG
CHECKED BY:	AG

REVISIONS

REV:	DATE:	DESCRIPTION:
0	11/10/20	100% CONSTRUCTION DRAWING
A	11/03/20	90% CONSTRUCTION DRAWING

LICENSEE

DATE SIGNED: 11-10-20

PROJECT INFORMATION

CSL04176
300 ALBIREO AVE.
LOMPOC, CA 93436

SHEET TITLE

TITLE SHEET

SHEET NUMBER

T-1

LEGEND

Symbol	Description	Symbol	Description	Symbol	Description	Symbol	Description
	NEW ANTENNA		GROUT OR PLASTER	—T—	TELCO RUN		5/8" x 10'-0" CU. GND ROD W/ TEST WELL 30" MIN. BELOW GRADE
	EXISTING ANTENNA		(E) BRICK	—T/E—	POWER/TELCO RUN		CHEMICAL GROUND ROD (60 GROUND ROD)
	GROUND ROD		(E) MASONRY	—G—	GROUNDING CONDUCTOR		CADWELD CONNECTION
	GROUND BUS BAR		CONCRETE		GROUNDING CONDUCTOR		MECHANICAL CONNECTION
	MECHANICAL GRND. CONN.		EARTH		CONDUIT UNDERGROUND		HALO GROUND CONNECTION
	CADWELD		GRAVEL		FUSE, SIZE AND TYPE AS INDICATED		CIRCUIT BREAKER
	GROUND ACCESS WELL		PLYWOOD		SAFETY SWITCH, 2P-240V-60A W/60A FUSES, NEMA 3R ENCLOSURE, SQ D CATALOG NO. H222NRB		UTILITY METER BASE
	ELECTRIC BOX		SAND		MANUAL TRANSFER SWITCH, 2P-240V-200A, NO FUSE, NEMA 3R ENCLOSURE		TRANSFORMER
	TELEPHONE BOX		WOOD CONT.		LIGHTING FIXTURE, FLUORESCENT, 10.94" x 4'-0", 2/40W, SURFACE MOUNTING TYPE, HUBBELL LIGHTING CATALOG #SSN232T		STEPDOWN TRANSFORMER
	LIGHT POLE		WOOD BLOCKING		LIGHTING FIXTURE, FLUORESCENT, 10.94" x 8'-0", 2/95W, SURFACE MOUNTING TYPE, HUBBELL LIGHTING CATALOG #SSN232T		RECEPTACLE, 2P-3W-125V-15A, DUPLEX, GROUND TYPE, HUBBELL CATALOG #5262
	FND. MONUMENT		STEEL		LIGHTING FIXTURE, HIGH PRESSURE SODIUM, 1/70W, WALL MOUNTING TYPE, HUBBELL LIGHTING CATALOG #HPG-157 OR 1/50W, HUBBELL LIGHTING CATALOG #HPG-131		TOGGLE SWITCH, 1P-120V-15A, HUBBELL CATALOG #HBL 1201CH
	SPOT ELEVATION		CENTERLINE		EXIT SIGN, THERMOPLASTIC LED, SINGLE FACE, UNIVERSAL MOUNTING, W/BATTERY PACK, HUBBELL LIGHTING CATALOG #PRS		TOGGLE SWITCH, 1P-120V-15A, "WP"
	SET POINT		PROPERTY/LEASE LINE		COMBINATION, EXIT SIGN & EMERGENCY LIGHTING, HUBBELL LIGHTING CATALOG #PRC		IONIZATION SMOKE DETECTOR W/ALARM HORN & AUXILIARY CONTACT, 120 VAC, SENTRY PART NO. 1100R
	REVISION		MATCH LINE		EMERGENCY LIGHTING, 2/9W, HUBBELL LIGHTING CATALOG #HED-50-2-PR1		POLE
	GRID REFERENCE		WORK POINT		LIGHTING FIXTURE, INCANDESCENT, 1/100W, WALL MOUNTING TYPE, HUBBELL LIGHTING CATALOG #BNH-100-08-1		(N) POLE MOUNTED XFMR
	DETAIL REFERENCE		GROUND CONDUCTOR		LIGHTING FIXTURE, HALOGEN, QUARTZ, 1/350W, HUBBELL LIGHTING CATALOG #QL-523		(E) POLE MOUNTED XFMR
	ELEVATION REFERENCE	—A—	COAXIAL CABLE		LIGHTING FIXTURE, 1/175W, METAL HALIDE, HUBBELL CAT #MS-0175H-335		(N) PAD MOUNTED XFMR
	SECTION REFERENCE	—SC—	OVERHEAD SERVICE CONDUCTORS		5/8" x 10'-0" CU. GND ROD 30" MIN. BELOW GRADE		(E) PAD MOUNTED XFMR
		—X—	CHAIN LINK FENCING				
		—OHT/OHP—	OVERHEAD TELEPHONE/OVERHEAD POWER				
		—OHT—	OVERHEAD TELEPHONE LINE				
		—OHP—	OVERHEAD POWER LINE				
		—T—	POWER RUN				
		—F/P—	FIBER/POWER RUN				

LEGEND 1

ABBREVIATIONS

A	AMPERE	EMT	ELECTRICAL METALLIC TUBING	MTD	MOUNTED	T.O.F.	TOP OF FOUNDATION
A.B.	ANCHOR BOLT	E.N.	EDGE NAIL	MTG	MOUNTING	T.O.P.	TOP OF PLATE (PARAPET)
ABV	ABOVE	ENCL	ENCLOSURE	MTL	METAL	T.O.S.	TOP OF STEEL
AC	ALTERNATE CURRENT/AIR CONDITIONER	ENG	ENGINEER	MTS	MANUAL TRANSFER SWITCH	T.O.W.	TOP OF WALL
ACCA	ANTENNA CABLE COVER ASSEMBLY	EQ	EQUAL	N	NEUTRAL	TYP	TYPICAL
ADDL	ADDITIONAL	EXIST (E)	EXISTING	(N)	NEW	UG	UNDER GROUND
A.F.F.	ABOVE FINISHED FLOOR	EXP	EXPANSION	NEMA	NATIONAL ELECTRICAL MANUFACTURERS ASSOC.	UL	UNDERWRITERS LABORATORY, INC.
A.F.G.	ABOVE FINISHED GRADE	EXT	EXTERIOR	NO.(#)	NUMBER	UMTS	UNIVERSAL MOBIL TECH. SYS. (3G MOBILE TECH.)
AIC	AMPERE INTERRUPTING CAPACITY	FAB	FABRICATION(OR)	N.T.S.	NOT TO SCALE	U.N.O.	UNLESS NOTED OTHERWISE
ALUM	ALUMINUM	FA	FACTOR	OBFI	OPTICAL BASEBAND INTERFACE	V	VOLT
ALT	ALTERNATE	F.A.	FIRE ALARM	OH	OVERHEAD	VAC	VOLT ALTERNATING CURRENT
ANT	ANTENNA	F.F.	FINISH FLOOR	OC	ON CENTER	V.I.F.	VERIFY IN FIELD
APPROX	APPROXIMATE(LY)	F.G.	FINISH GRADE	OPNG	OPENING	W/	WITH
ARCH	ARCHITECT(URAL)	FIN	FINISH(ED)	P/C	PRECAST CONCRETE	W.S.	WATER ON SITE
AWG	AMERICAN WIRE GAUGE	FLR	FLOOR	PCS	PERSONAL COMMUNICATION SERVICES	WD	WOOD/WIDTH
BATT	BATTERY	FDN	FOUNDATION	PH	PHASE	W/O	WITHOUT
BD	BOARD	F.O.C.	FACE OF CONCRETE	PLY	PLYWOOD	WP	WEATHERPROOF
BLDG	BUILDING	F.O.M.	FACE OF MASONRY	PNLBD	PANELBOARD	WT	WEIGHT
BLK	BLOCK	F.O.S.	FACE OF STUD	PPC	POWER PROTECTION CABINET	XFMR	TRANSFORMER
BLKG	BLOCKING	F.O.W.	FACE OF WALL	PRC	PRIMARY RADIO CABINET	XFMRS	TRANSFORMERS
BM	BEAM	F.S.	FINISH SURFACE	PRI	PRIMARY	XLPE	CROSS-LINK POLYETHYLENE
B.N.	BOUNDARY NAILING	FT	FOOT (FEET)	P.S.F.	POUNDS PER SQUARE FOOT		CENTERLINE
BR	BRANCH	FTG	FOOTING	P.S.I.	POUNDS PER SQUARE INCH		PLATE, PROPERTY LINE
BRKR	BREAKER	GA	GAUGE	P.T.	PRESSURE TREATED		
BTCW	BARE TINNED COPPER WIRE	GND	GROUND	PWR	POWER (CABINET)		
BTS	BASE TRANSMISSION SYSTEM	GC	GROWTH (CABINET)	QTY	QUANTITY		
B.O.F.	BOTTOM OF FOOTING	GEN	GENERATOR	RAD	RADIUS		
B/U	BACK-UP CABINET	GFCI	GROUND FAULT CIRCUIT INTERRUPTER	RBS	RADIO BASE STATION		
C	CONDUIT	GLB (GLU-LAM)	GLUE LAMINATED BEAM	RBS (P)	(BASE STATION 3G NETWORKS)		
CAB	CABINET	GPS	GLOBAL POSITIONING SYSTEM	REF	REFERENCE		
CANT	CANTILEVER(ED)	GRND	GROUND	REINF	REINFORCEMENT(ING)		
CB	CIRCUIT BREAKER	GSM	GLOBAL SYSTEM MOBILE (2G+ MOBILE TECH.)	REQ'D	REQUIRED		
CDMA	CODE-DIVISION MULTIPLE ACCESS (2G & 3G)	HDG	HARD DRAWN COPPER WIRE	RGS	RIGID GALVANIZED STEEL		
CDUK	CONSOLIDATION DISTRIBUTION UNIT KIT	HDR	HEADER	RRU	REMOTE RADIO UNIT		
C.I.P.	CAST IN PLACE	HGR	HANGER	RX	RECEIVER AIR INTERFACE TRAY		
CIR	CIRCUIT	HPS	HIGH PRESSURE SODIUM	SAF	SAFETY		
CLG	CEILING	HT	HEIGHT	SCH	SCHEDULE		
CLR	CLEAR	IGR	ISOLATED COPPER GROUND BUS	SDBC	SOFT DRAWN BARE COPPER		
CMU	CONCRETE MASONRY UNIT (CMU BLOCKS)	IN	INCH(ES)	SEC	SECONDARY		
COL	COLUMN	INT	INTERIOR	SHT	SHEET		
CONC	CONCRETE	LB(#)	POUND(S)	SIM	SIMILAR		
CONN	CONNECTION(OR)	L.B.	LAG BOLTS	SN	SOLID NEUTRAL		
CONST	CONSTRUCTION	L.F.	LINEAR FEET (FOOT)	SPEC	SPECIFICATION(S)		
CONT	CONTINUOUS	L	LENGTH	SQ	SQUARE		
d	PENNY (NAILS)	LTE	LONG TERM EVOLUTION (4G MOBILE TECH.)	SS	STAINLESS STEEL		
DBL	DOUBLE	MAS	MASONRY	STD	STANDARD		
DC	DIRECT CURRENT	MAX	MAXIMUM	STL	STEEL		
DEPT	DEPARTMENT	M.B.	MACHINE BOLT	STRUC	STRUCTURAL		
D.F.	DOUGLAS FIR	MECH	MECHANICAL	SURF	SURFACE		
DIA	DIAMETER	MFR	MANUFACTURER	SW	SWITCH		
DIAG	DIAGONAL	MIN	MINIMUM	TEL	TELEPHONE		
DIM	DIMENSION	MISC	MISCELLANEOUS	TEMP	TEMPORARY		
DWG	DRAWING(S)	MLO	MAIN LUGS ONLY	THK	THICKNESS		
DWL	DOWEL(S)			TMA	TOWER MOUNTED AMPLIFIER		
EA	EACH			TMAS	TOWER MOUNTED AMPLIFIERS		
EGR	EMERGENCY GENERATOR RECEPTACLE			TN	TOE NAIL		
EL	ELEVATION			T.O.A.	TOP OF ANTENNA		
ELEC	ELECTRICAL			T.O.C.	TOP OF CURB		
ELEV	ELEVATOR						

ABBREVIATIONS 2

NOTES FOR EXISTING AT&T CELL SITES:

1. PRIOR TO THE SUBMISSION OF BIDS, THE BIDDING SUBCONTRACTOR SHALL VISIT THE CELL SITE TO FAMILIARIZE WITH THE EXISTING CONDITIONS AND TO CONFIRM THAT THE WORK CAN BE ACCOMPLISHED AS SHOWN ON THE CONSTRUCTION DRAWINGS. ANY DISCREPANCY FOUND SHALL BE BROUGHT TO THE ATTENTION OF CONTRACTOR.
2. SUBCONTRACTOR SHALL VERIFY ALL EXISTING DIMENSIONS AND CONDITIONS PRIOR TO COMMENCING ANY WORK. ALL DIMENSIONS OF EXISTING CONSTRUCTION SHOWN ON THE DRAWINGS MUST BE VERIFIED. SUBCONTRACTOR SHALL NOTIFY THE CONTRACTOR OF ANY DISCREPANCIES PRIOR TO ORDERING MATERIAL OR PROCEEDING WITH CONSTRUCTION.
3. THE EXISTING CELL SITE IS IN FULL COMMERCIAL OPERATION. ANY CONSTRUCTION WORK BY SUBCONTRACTOR SHALL NOT DISRUPT THE EXISTING NORMAL OPERATION. ANY WORK ON EXISTING EQUIPMENT MUST BE COORDINATED WITH CONTRACTOR. ALSO, WORK SHOULD BE SCHEDULED FOR AN APPROPRIATE MAINTENANCE WINDOW USUALLY IN LOW TRAFFIC PERIODS AFTER MIDNIGHT.
4. SINCE THE CELL SITE IS ACTIVE, ALL SAFETY PRECAUTIONS MUST BE TAKEN WHEN WORKING AROUND HIGH LEVELS OF ELECTROMAGNETIC RADIATION. EQUIPMENT SHOULD BE SHUTDOWN PRIOR TO PERFORMING ANY WORK THAT COULD EXPOSE THE WORKERS TO DANGER. PERSONAL RF EXPOSURE MONITORS ARE ADVISED TO BE WORN TO ALERT OF ANY DANGEROUS EXPOSURE LEVELS.
5. SUBCONTRACTOR SHALL DETERMINE ACTUAL ROUTING OF CONDUIT, POWER AND T1 CABLES, GROUNDING CABLES AS SHOWN ON THE POWER, GROUNDING AND TELCO PLAN DRAWING. SUBCONTRACTOR SHALL UTILIZE EXISTING TRAYS AND/OR SHALL ADD NEW TRAYS AS NECESSARY. SUBCONTRACTOR SHALL CONFIRM THE ACTUAL ROUTING WITH THE CONTRACTOR.
6. SUBCONTRACTOR SHALL LEGALLY AND PROPERLY DISPOSE OF ALL SCRAP MATERIALS SUCH AS COAXIAL CABLES AND OTHER ITEMS REMOVED FROM THE EXISTING FACILITY. ANTENNAS REMOVED SHALL BE RETURNED TO THE OWNER'S DESIGNATED LOCATION.

EXISTING AT&T CELL SITE NOTES 3

GENERAL NOTES

1. THE FACILITY IS AN UNOCCUPIED DIGITAL TELECOMMUNICATION FACILITY.
2. PLANS ARE NOT TO BE SCALED AND ARE INTENDED TO BE A DIAGRAMMATIC OUTLINE ONLY, UNLESS NOTED OTHERWISE. THE WORK SHALL INCLUDE FURNISHING MATERIALS, EQUIPMENT, APPURTENANCES AND LABOR NECESSARY TO COMPLETE ALL INSTALLATIONS AS INDICATED ON THE DRAWINGS.
3. PRIOR TO THE SUBMISSION OF BIDS, THE CONTRACTORS SHALL VISIT THE JOB SITE AND BE RESPONSIBLE FOR ALL CONTRACT DOCUMENTS, FIELD CONDITIONS AND DIMENSIONS, AND CONFIRMING THAT THE WORK MAY BE ACCOMPLISHED AS SHOWN PRIOR TO PROCEEDING WITH CONSTRUCTION. ANY DISCREPANCIES ARE TO BE BROUGHT TO THE ATTENTION OF THE IMPLEMENTATION ENGINEER AND ENGINEER PRIOR TO PROCEEDING WITH THE WORK.
4. THE CONTRACTOR SHALL OBTAIN, IN WRITING, AUTHORIZATION TO PROCEED BEFORE STARTING WORK ON ANY ITEM NOT CLEARLY DEFINED OR IDENTIFIED BY THE CONTRACT DOCUMENTS.
5. THE CONTRACTOR SHALL INSTALL ALL EQUIPMENT AND MATERIALS IN ACCORDANCE WITH MANUFACTURER'S RECOMMENDATIONS UNLESS SPECIFICALLY INDICATED OTHERWISE OR WHERE LOCAL CODES OR REGULATIONS TAKE PRECEDENCE.
6. ALL WORK PERFORMED AND MATERIALS INSTALLED SHALL BE IN STRICT ACCORDANCE WITH ALL APPLICABLE CODES, REGULATIONS AND ORDINANCES. CONTRACTOR SHALL GIVE ALL NOTICES AND COMPLY WITH ALL LAWS, ORDINANCES, RULES, REGULATIONS AND LAWFUL ORDERS OF ANY PUBLIC AUTHORITY REGARDING THE PERFORMANCE OF THE WORK. MECHANICAL AND ELECTRICAL SYSTEMS SHALL BE INSTALLED IN ACCORDANCE WITH ALL APPLICABLE MUNICIPAL AND UTILITY COMPANY SPECIFICATIONS, AND LOCAL AND STATE JURISDICTIONAL CODES, ORDINANCES AND APPLICABLE REGULATIONS.
7. THE GENERAL CONTRACTOR SHALL SUPERVISE AND DIRECT THE WORK, USING THE BEST SKILLS AND ATTENTION. THE CONTRACTOR SHALL BE SOLELY RESPONSIBLE FOR ALL CONSTRUCTION MEANS, METHODS, TECHNIQUES, SEQUENCES AND PROCEDURES AND FOR COORDINATING ALL PORTIONS OF THE WORK UNDER THE CONTRACT INCLUDING CONTACT AND COORDINATION WITH THE IMPLEMENTATION ENGINEER AND WITH THE LANDLORD'S AUTHORIZED REPRESENTATIVE.
8. SEAL PENETRATIONS THROUGH FIRE RATED AREAS WITH U.L. LISTED AND FIRE CODE APPROVED MATERIALS.
9. PROVIDE A PORTABLE FIRE EXTINGUISHER WITH A RATING OF NOT LESS THAN 2-A OR 2-A10BC WITHIN 75 FEET TRAVEL DISTANCE TO ALL PORTIONS OF THE PROJECT AREA DURING CONSTRUCTION.
10. DETAILS ARE INTENDED TO SHOW END RESULT OF DESIGN. MINOR MODIFICATIONS MAY BE REQUIRED TO SUIT JOB DIMENSIONS OR CONDITIONS, AND SUCH MODIFICATIONS SHALL BE INCLUDED AS PART OF THE WORK.
11. REPRESENTATIONS OF TRUE NORTH, OTHER THAN THOSE FOUND ON THE PLOT OF SURVEY DRAWING (SHEET LS1 OR SHEET C-1), SHALL NOT BE USED TO IDENTIFY OR ESTABLISH THE BEARING OF TRUE NORTH AT THE SITE. THE CONTRACTOR SHALL RELY SOLELY ON THE PLOT OF SURVEY DRAWING AND ANY SURVEYOR'S MARKINGS AT THE SITE FOR THE ESTABLISHMENT OF TRUE NORTH, AND SHALL NOTIFY THE ENGINEER PRIOR TO PROCEEDING WITH THE WORK IF ANY DISCREPANCY IS FOUND BETWEEN THE VARIOUS ELEMENTS OF THE WORKING DRAWINGS AND THE TRUE NORTH ORIENTATION AS DEPICTED ON THE CIVIL SURVEY. THE CONTRACTOR SHALL ASSUME SOLE LIABILITY FOR ANY FAILURE TO NOTIFY THE ENGINEER.
12. THE CONTRACTOR SHALL MAKE NECESSARY PROVISIONS TO PROTECT EXISTING IMPROVEMENTS, PAVING, CURBS, VEGETATION, GALVANIZED SURFACES, ETC., AND UPON COMPLETION OF WORK REPAIR ANY DAMAGE THAT OCCURRED DURING CONSTRUCTION TO THE SATISFACTION OF AT&T.
13. KEEP GENERAL AREA CLEAN, HAZARD FREE, AND DISPOSE OF ALL DIRT, DEBRIS, RUBBISH AND REMOVE EQUIPMENT NOT SPECIFIED AS REMAINING ON THE PROPERTY. LEAVE PREMISES IN CLEAN CONDITION AND FREE FROM PAINT SPOTS, DUST OR SMUDGES OF ANY NATURE.
14. PENETRATIONS OF ROOF MEMBRANES SHALL BE PATCHED/FLASHED AND MADE WATERTIGHT USING LIKE MATERIALS IN ACCORDANCE WITH NRCA ROOFING STANDARDS AND DETAILS. CONTRACTOR SHALL OBTAIN DETAILING CLARIFICATION FOR SITE-SPECIFIC CONDITIONS FROM ENGINEER, IF NECESSARY, BEFORE PROCEEDING.
15. BEFORE ORDERING AND/OR BEFORE FABRICATING/CONSTRUCTING/INSTALLING ANY ITEMS, VERIFY THE TYPES AND QUANTITIES.
16. CONTRACTOR SHALL PROVIDE SITE FOREMAN WITH A CELLULAR PHONE AND PAGER, AND KEEP SAME ON SITE WHENEVER PERSONNEL ARE ON SITE.
17. THE CONTRACTOR SHALL VERIFY ALL DIMENSIONS AND CONDITIONS ON THE SITE AND NOTIFY THE PROJECT MANAGER OF ANY DISCREPANCIES BEFORE STARTING ANY WORK.
18. CONTRACTOR TO PROVIDE COMPLETE SET OF AS BUILT DRAWINGS WITHIN 10 WORKING DAYS OF PROJECT COMPLETION.
19. CONTRACTOR IS TO EXCAVATE 6" BELOW EXISTING GRADE AND SPRAY WITH WEED CONTROL. REPLACE WITH CLASS II AGGREGATE BASE AND CRUSHED WASHED ROCK AS SPECIFIED ON SITE PLAN.
20. CONTRACTOR SHALL PROVIDE TOILET FACILITY DURING ALL PHASES OF CONSTRUCTION.
21. PRIOR TO THE COMMENCEMENT OF CONSTRUCTION OR THE FABRICATION OF MATERIALS TO BE INSTALLED AT THE SITE, THE CONTRACTOR SHALL FIELD VERIFY ALL DIMENSIONS INCLUDING AS-BUILT DIMENSIONS OF EXISTING STRUCTURES OR STRUCTURAL ELEMENTS HAVING A BEARING ON THE SCOPE OF THE WORK TO BE PERFORMED. IF ANY DISCREPANCY IS FOUND BETWEEN THE VARIOUS ELEMENTS OF THE WORKING DRAWINGS AND THE DIMENSIONS OR CONDITIONS FOUND TO BE EXISTING IN THE FIELD, THE CONTRACTOR SHALL NOTIFY THE ENGINEER AND OBTAIN DESIGN RESOLUTION PRIOR TO PROCEEDING WITH THE PORTION(S) OF THE WORK AFFECTED. THE CONTRACTOR SHALL ASSUME SOLE LIABILITY FOR ANY FAILURE TO SO NOTIFY THE ENGINEER AND OBTAIN RESOLUTION BEFORE PROCEEDING.

GENERAL NOTES 4

APPLICANT:

The NEW at&t

1452 EDINGER AVE., 3RD FLOOR
TUSTIN, CA 92780

ENGINEER:

Eukon
an SFC Communications, Inc. Company
65 POST, SUITE 1000
IRVINE, CA 92618
TEL: (949) 553-8566
www.eukongroup.com

DRAWN BY: AG
CHECKED BY: AG

REVISIONS

REV	DATE	DESCRIPTION
0	11/10/20	100% CONSTRUCTION DRAWING
A	11/03/20	90% CONSTRUCTION DRAWING

LICENSEE

DATE SIGNED: 11-10-20

PROJECT INFORMATION

CSL04176
300 ALBIREO AVE.
LOMPOC, CA 93436

SHEET TITLE:

GENERAL NOTES, LEGEND, AND ABBREVIATIONS

SHEET NUMBER:

T-2

ALERTING SIGNS
NO SCALE

GENERATOR BATTERY
NO SCALE

BATTERY
NO SCALE

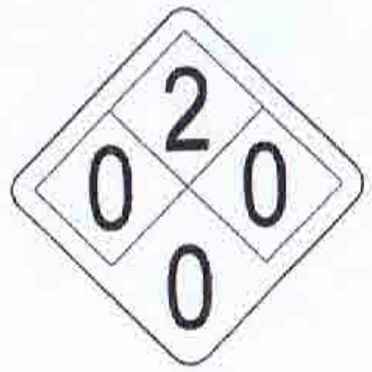

DIESEL
NO SCALE

ALERTING SIGN
NO SCALE

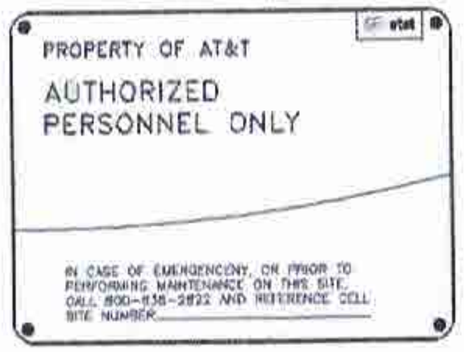

INFO SIGN #5
NO SCALE

INFO SIGN #3
NO SCALE

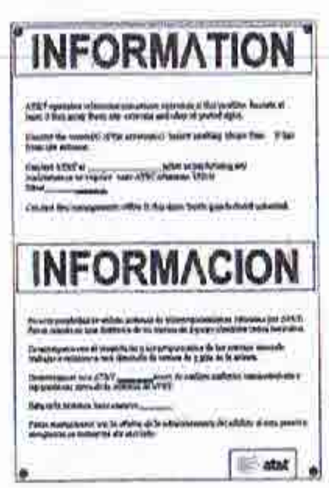

INFO SIGN #1
NO SCALE

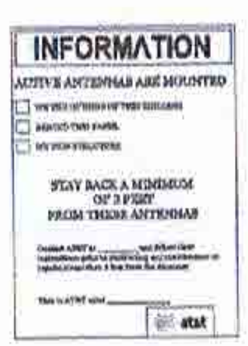

INFO SIGN #2
NO SCALE

INFO SIGN #4
NO SCALE

GENERAL SIGNAGE GUIDELINES

Structure Type	INFO SIGN #1	INFO SIGN #2	INFO SIGN #3	INFO SIGN #4	INFO SIGN #5	Striping	NOTICE SIGN	CAUTION SIGN
Towers								
MONOPINE/Monopole/Monopolm	entrance gates, shelter doors OR on the outdoor cabinets	climbing side of the Tower	on backside of Antennas	on the side of Antennas	On the shelter door or on one outdoor equipment cabinet			At the height of the first climbing step, min. 8ft above ground
SCE Towers/Towers with high voltage	entrance gates, shelter doors OR on the outdoor cabinets	climbing side of the Tower	on backside of Antennas	on the side of Antennas	On the shelter door or on one outdoor equipment cabinet			At the height of the first climbing step, min. 8ft above ground
Light Poles/Flag Poles	entrance gates, shelter doors OR on the outdoor cabinets	on the pole, no less than 3ft below the Antenna and no	on backside of Antennas	on the side of Antennas	On the shelter door or on one outdoor equipment cabinet			
Utility Wood Poles (JPA)	entrance gates, shelter doors OR on the outdoor cabinets	on the pole, no less than 3ft below the Antenna and no	on backside of Antennas	on the side of Antennas	On the shelter door or on one outdoor equipment cabinet		If OP max value of MPE at antenna level is 0-99% Notice sign; over 99% Caution sign at no less that 3ft below antenna and 8ft above ground	
Microcells mounted on non-JPA poles	entrance gates, shelter doors OR on the outdoor cabinets	on the pole, no less than 3ft below the Antenna and no	on backside of Antennas	on the side of Antennas	On the shelter door or on one outdoor equipment cabinet		Notice or Caution sign at no less than 8ft above ground; only if the exposure exceeds 50% of the General Public Exposure at 6ft above ground or at	
Roof Tops								
At all access points to the roof	X							
On Antennas	X		X	X				
Concealed Antennas	X	X						
Antennas mounted facing outside the building	X	X						
Antennas on support structure	X	X						
Rooftop Group:								
Radiation area is within 3ft from antenna	X	adjacent to each antenna					other Notice or Caution sign (based on Rooftop results) at antennas/barrier	
Radiation area is beyond 3ft from antenna	X	adjacent to each antenna				diagonal, yellow striping as in Rooftop graph		
Church Steeples	Access to steeple	adjacent to antennas if antennas are concealed	On backside of Antennas	On the side of Antennas	On the shelter door or on one outdoor equipment cabinet			Caution sign at the antennas
Water Stations	Access to ladder	adjacent to antennas if antennas are concealed	On backside of Antennas	On the side of Antennas	On the shelter door or on one outdoor equipment cabinet			Caution sign beside info sign #1, min. 8ft above ground

Notes for Rooftop sites:
1. Either NOTICE or CAUTION sign need to be posted at each sector as close as possible to the outer edge of the striped off area of the outer antennas of the sector.
2. If Rooftop shows: only blue = Notice Sign, blue and yellow = Caution Sign, only yellow = Caution sign to be installed
3. Should the Required striping area interfere with any structures or equipment (A/C, vents, roof hatch, doors, other antennas, dishes, etc.), please notify AT&T to modify the striping area, prior to starting the work

SIGNAGE GUIDELINES CHART
NO SCALE

APPLICANT

The NEW at&t
1452 EDINGER AVE., 3RD FLOOR
TUSTIN, CA 92780

ENGINEER

Eukon
an SFC Communications, Inc. Company
65 POST, SUITE 1000
IRVINE, CA 92618
TEL (949) 553-8566
www.eukongroup.com

DRAWN BY:	AG
CHECKED BY:	AG

REVISIONS

REV	DATE	DESCRIPTION
0	11/15/20	100% CONSTRUCTION DRAWING
A	11/03/20	90% CONSTRUCTION DRAWING

LICENSEE

DATE SIGNED: 11-19-20

PROJECT INFORMATION

CSL04176
300 ALBIREO AVE.
LOMPOC, CA 93436

SHEET TITLE

GENERAL SIGNAGE

SHEET NUMBER

T-3

STATEMENT OF SPECIAL INSPECTIONS

NO.	DESCRIPTION OF TYPE OF INSPECTION REQUIRED. LOCATION, REMARKS.	FREQUENCY.
I.	ANCHORS (SEE SHEET A-7)	
	ADHESIVE AND EXPANSION ANCHORS IN CONCRETE OR MASONRY, HILTI KWIK BOLT TZ EXPANSION ANCHOR PER ICC REPORT ESR-1917.	PERIODIC
	ADHESIVE AND EXPANSION ANCHORS IN CONCRETE OR MASONRY: INSPECTOR SHALL VERIFY ANCHOR TYPE, ANCHOR DIMENSIONS,	
	CONCRETE TYPE, THICKNESS AND COMPRESSIVE STRENGTH, HOLED DIMENSIONS, HOLE CLEANING PROCEDURES, ANCHOR SPACING,	
	EDGE DISTANCES, ANCHOR EMBEDMENT, AND TIGHTENING TORQUE.	
J.	CONCRETE. (SEE SHEET A-8)	CONTINUOUS
A.	CONTINUOUS INSPECTION AND TEST CYLINDERS FOR STRUCTURAL CONCRETE EXCEPT FOUNDATION CONCRETE OF 2500 PSI OR LESS	
	AND SPECIFIED EXCEPTIONS PER SECTION 1705.3 (TABLE 1705.3).	
B.	CONTINUOUS SPECIAL INSPECTION OF DRILLING OPERATION FOR PIER FOUNDATIONS.	
C.	CONTINUOUS SPECIAL INSPECTION TO VERIFY LOCATION, PLUMBNESS, DIAMEETR AND LENGTH OF PIER FOUNDATIONS.	
D.	CONTINUOUS SPECIAL INSPECTION OF ANCHOR BOLTS PRIOR TO AND DURING CONCRETE PLACEMENT.	
E.	CONTINUOUS SPECIAL INSPECTION OF CONCRETE PLACEMENT	
F.	CONTINUOUS SPECIAL INSPECTION OF DRILLING OPERATION FOR PIER FOUNDATIONS.	
J.	REINFORCING STEEL. (SEE SHEET A-8)	PERIODIC
A.	PLACING OF REINFORCING PER SECTION 1705.3 (TABLE 1705.3).	
B	PERIODIC SPECIAL INSPECTION OF PLACEMENT OF REINFORCEMENT STEEL.	
K.	HIGH STRENGTH BOLTING. (SEE MP-2)	
A	PERIODIC SPECIAL INSPECTION OF HIGH-STRENGTH BOLTING	PERIODIC
L.	WELDING.	
A	NO FIELD WELDING SHALL BE PERMITTED. STEEL FABRICATION SHALL BE DONE ON THE PREMISES OF A FABRICATOR REGISTERED	
	AND APPROVED TO PERFORM SUCH WORK WITHOUT SPECIAL INSPECTION.	
S.	SEE SHEET MP-1 FOR TOWER INSPECTIONS	

SPECIAL INSPECTION NOTES:

1. THE SPECIAL INSPECTIONS IDENTIFIED ON PLANS ARE, IN ADDITION TO, AND NOT A SUBSTITUTE FOR, THOSE INSPECTIONS REQUIRED TO BE PERFORMED BY A CITY'S BUILDING INSPECTOR.

2. CONTINUOUS INSPECTION IS ALWAYS REQUIRED DURING THE PERFORMANCE OF THE WORK UNLESS OTHERWISE SPECIFIED. WHEN WORK IN MORE THAN ONE CATEGORY OF WORK REQUIRING SPECIAL INSPECTION IS TO BE PERFORMED SIMULTANEOUSLY, OR THE GEOGRAPHIC LOCATION OF THE WORK IS SUCH THAT IT CANNOT BE CONTINUOUSLY OBSERVED IN ACCORDANCE WITH THE PROVISIONS OF CBC SECTION 1704, IT IS THE AGENT'S RESPONSIBILITY TO EMPLOY A SUFFICIENT NUMBER OF INSPECTORS TO ASSURE THAT ALL THE WORK IS INSPECTED IN ACCORDANCE WITH THOSE PROVISIONS.

3. THE SPECIAL INSPECTORS MUST BE CERTIFIED BY THE **AUTHORITY HAVING JURISDICTION,** IN THE CATEGORY OF WORK REQUIRED TO HAVE SPECIAL INSPECTION.

4. IT IS THE RESPONSIBILITY OF THE CONTRACTOR TO NOTIFY THE SPECIAL INSPECTOR OR INSPECTION AGENCY AT LEAST ONE WORKING DAY PRIOR TO PERFORMING ANY WORK THAT REQUIRES SPECIAL INSPECTION.

5. NOTICE TO THE CONTRACTOR: BY USING THIS PERMITTED CONSTRUCTION DRAWINGS FOR CONSTRUCTION/INSTALLATION OF THE WORK SPECIFIED HEREIN, YOU AGREE TO COMPLY WITH THE REQUIREMENTS OF THE AUTHORITY HAVING JURISDICTION FOR SPECIAL INSPECTIONS, STRUCTURAL OBSERVATIONS, CONSTRUCTION MATERIAL TESTING AND OFF-SITE FABRICATION OF BUILDING COMPONENTS, CONTAINED IN THE STATEMENT OF SPECIAL INSPECTIONS AND, AS REQUIRED BY THE CALIFORNIA CONSTRUCTION CODES

6. NOTICE TO THE CONTRACTOR/BUILDER/INSTALLER/SUB-CONTRACTOR/OWNER-BUILDER: BY USING THIS PERMITTED CONSTRUCTION DRAWINGS FOR CONSTRUCTION/INSTALLATION OF THE WORK SPECIFIED HEREIN, YOU ACKNOWLEDGE AND ARE AWARE OF, THE REQUIREMENTS CONTAINED IN THE STATEMENT OF SPECIAL INSPECTIONS. YOU AGREE TO COMPLY WITH THE REQUIREMENTS OF THE AUTHORITY HAVING JURISDICTION FOR SPECIAL INSPECTIONS, STRUCTURAL OBSERVATIONS, CONSTRUCTION MATERIAL TESTING AND OFF-SITE FABRICATION OF BUILDING COMPONENTS, CONTAINED IN THE STATEMENT OF SPECIAL INSPECTIONS AND, AS REQUIRED BY THE CALIFORNIA CONSTRUCTION CODES.

7. THE CONSTRUCTION MATERIALS TESTING LABORATORY MUST BE APPROVED BY THE AUTHORITY HAVING JURISDICTION, FOR TESTING OF MATERIALS, SYSTEMS, COMPONENTS AND, EQUIPMENTS.

8. WORK REQUIRING SPECIAL INSPECTION THAT IS INSTALLED OR COVERED WITHOUT THE APPROVAL OF THE CITY INSPECTOR IS SUBJECT TO REMOVAL OR EXPOSURE AT NO COST TO THE GOVERNING JURISDICTION.

APPLICANT:

The NEW at&t

1452 EDINGER AVE., 3RD FLOOR
TUSTIN, CA 92780

ENGINEER:

Eukon
an SFC Communications, Inc. Company
65 POST, SUITE 1000
IRVINE, CA 92618
TEL: (949) 553-8566
www.eukongroup.com

DRAWN BY:	AG
CHECKED BY:	AG

REVISIONS:

REV.	DATE	DESCRIPTION
0	11/10/20	100% CONSTRUCTION DRAWING
A	11/23/20	90% CONSTRUCTION DRAWING

LICENSEE:

DATE SIGNED: 11-19-20

PROJECT INFORMATION:

CSLC4176
300 ALBIREO AVE.
LOMPOC, CA 93436

SHEET TITLE:

STATEMENT OF SPECIAL INSPECTIONS

SHEET NUMBER:

T-4

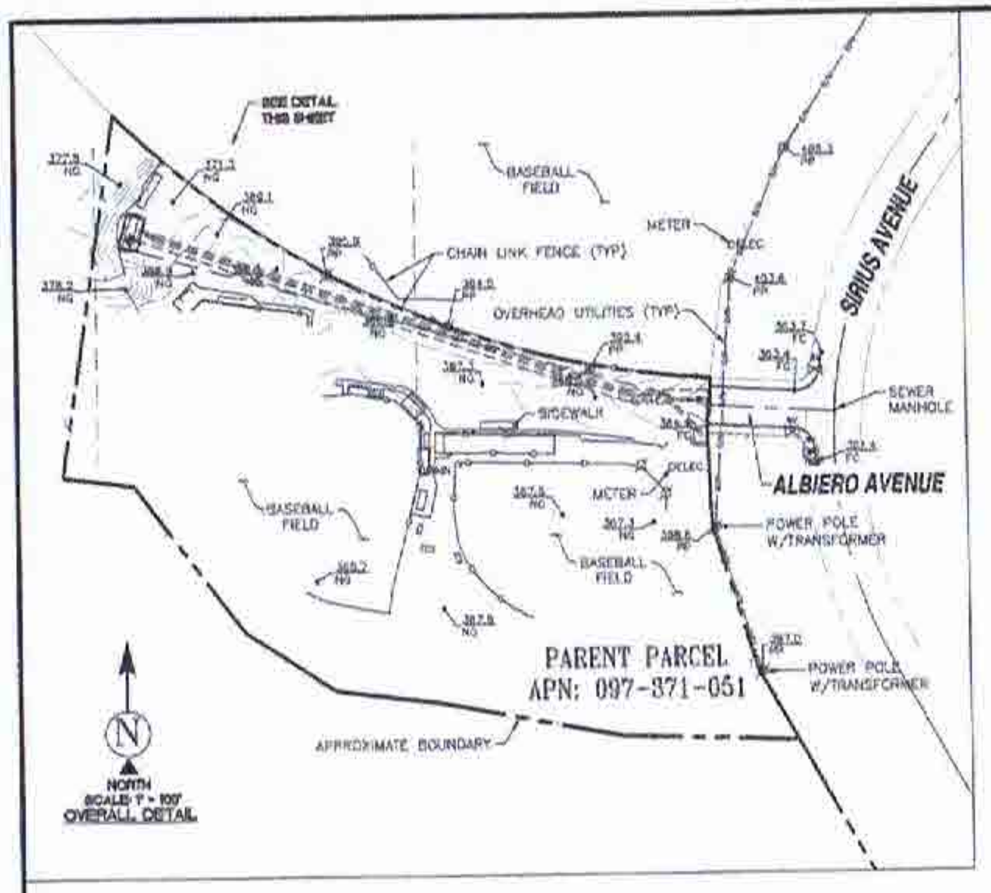

LINE TABLE		
LINE #	LENGTH	DIRECTION
L1	6.81'	N76°27'16"W
L2	6.81'	N76°27'16"W
L3	6.80'	N13°32'44"E
L4	23.30'	N13°32'44"E
L5	20.00'	S76°27'16"E
L6	23.30'	S13°32'44"W
L7	6.80'	S13°32'44"W

CURVE TABLE			
CURVE #	LENGTH	RADIUS	DELTA
C1	6.48'	10.50	35°20'18"
C2	6.61'	10.50	35°50'20"
C3	6.51'	10.50	35°30'20"

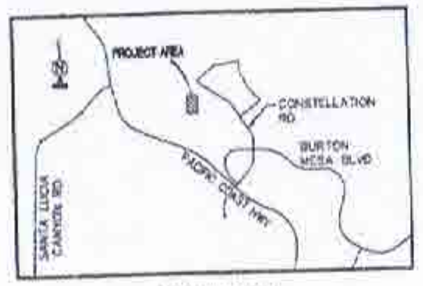

VICINITY MAP
N.T.S.

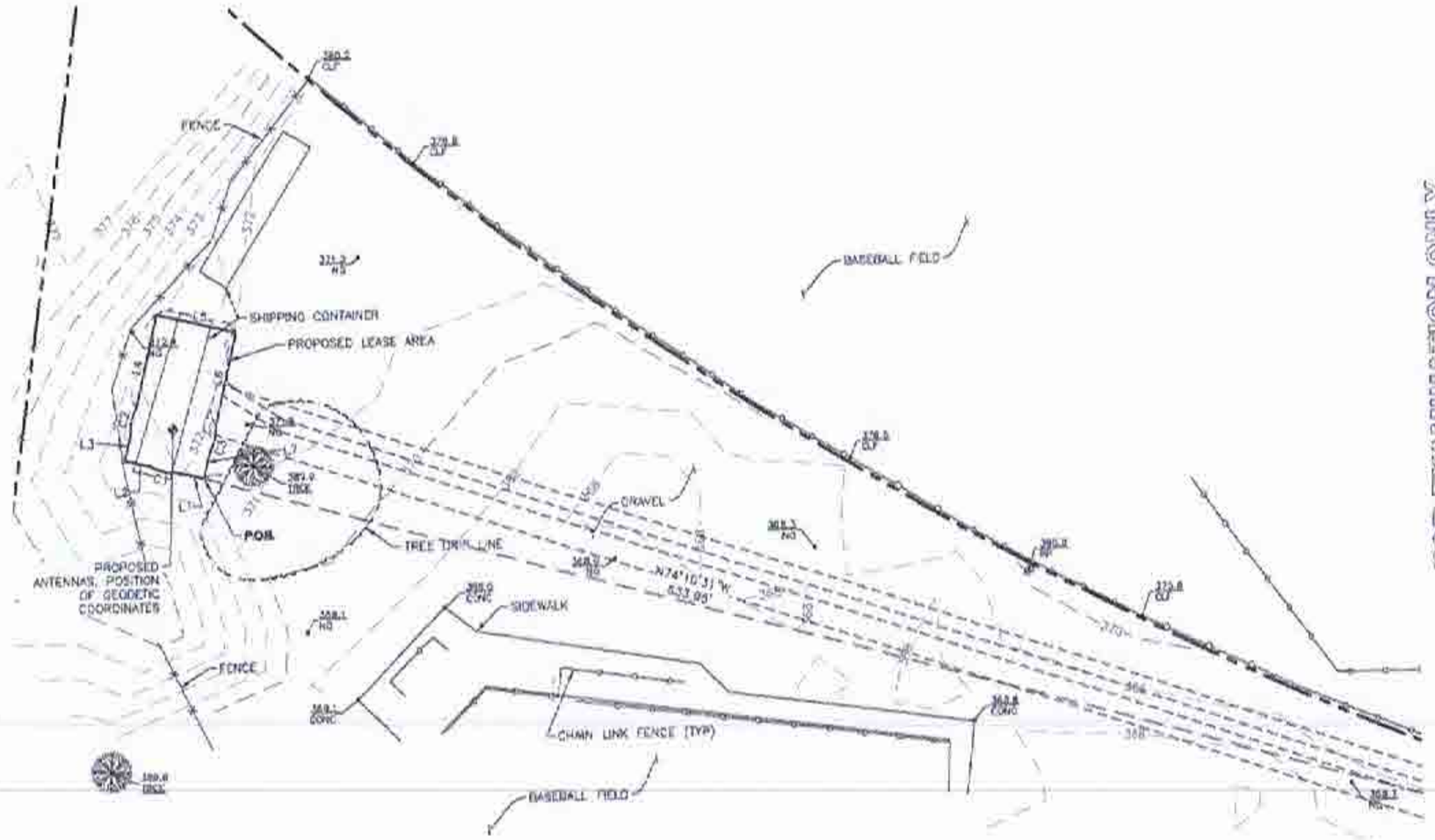

SURVEY DATE
10/29/2018

BASIS OF BEARING
BEARINGS SHOWN HEREON ARE BASED UPON U.S. STATE PLANE NAD83 COORDINATE SYSTEM CALIFORNIA STATE PLANE COORDINATE ZONE FIVE, DETERMINED BY GPS OBSERVATIONS.

BENCHMARK
PROJECT ELEVATIONS ESTABLISHED FROM GPS DERIVED ORTHOMETRIC HEIGHTS BY APPLICATION OF NGS 'GEOID 12B' MODELED SEPARATIONS TO ELLIPSOID HEIGHTS DETERMINED BY OBSERVATIONS OF THE 'SMARTNET' REAL TIME NETWORK. ALL ELEVATIONS SHOWN HEREON ARE REFERENCED TO NAVD88.

FLOOD ZONE
THIS PROJECT APPEARS TO BE LOCATED WITHIN FLOOD ZONE "X", ACCORDING TO FEDERAL EMERGENCY MANAGEMENT AGENCY FLOOD INSURANCE RATE MAP(S), MAP ID #06083C0730F, DATED 6/30/2005.

UTILITY NOTES
SURVEYOR DOES NOT GUARANTEE THAT ALL UTILITIES ARE SHOWN OR THEIR LOCATIONS ARE DEFINITE. IT IS THE RESPONSIBILITY OF THE CONTRACTOR AND DEVELOPER TO CONTACT BLUE STAKE AND ANY OTHER INVOLVED AGENCIES TO LOCATE ALL UTILITIES PRIOR TO CONSTRUCTION. REMOVAL, RELOCATION AND/ OR REPLACEMENT IS THE RESPONSIBILITY OF THE CONTRACTOR.

LEGEND

AP	ASPHALT		FIRE HYDRANT
BLDG	TOP OF BUILDING		UTILITY POLE
CLF	CHAIN LINK FENCE		LIGHT POLE
CONC	CONCRETE		POSITION OF GEODETIC COORDINATES
D/W	ACCESS DRIVEWAY		SPOT ELEVATION
EP	EDGE OF PAVEMENT		WATER CONTROL VALVE
FC	FACE OF CURB		GAS VALVE
LP	LIGHT POLE		
NG	NATURAL GRADE		
R/W	RIGHT OF WAY		
SW	SIDEWALK		
	TREES		

CHAIN LINK FENCE
STREET CENTERLINES
SUBJECT PROPERTY LINE
ADJACENT PROPERTY LINE
EASEMENT LINES
TIE LINES
LEASE AREA LIMITS
MAJOR CONTOUR INTERVAL
MINOR CONTOUR INTERVAL
TREE LINE

POSITION OF GEODETIC COORDINATES
LATITUDE 34° 42' 33.35" (34.709264°) NORTH (NAD83)
LONGITUDE 120° 28' 32.62" (120.475700°) WEST (NAD83)
GROUND ELEVATION @ 372.0' (NAVD88)

N12°26'

GRAPHIC SCALE
(IN FEET)
1 inch = 20 ft.

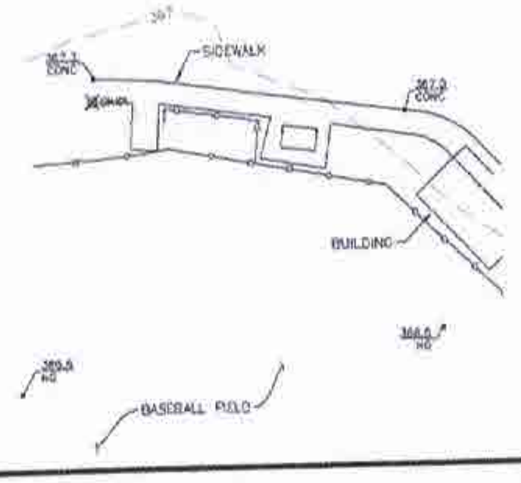

FOR EXAMINATION ONLY

APPLICANT:
The new at&t
1452 EDINGER AVENUE
3RD FLOOR
TUSTIN, CA 92780

ENGINEER:
Eukon
an SFC Communications, Inc. Company
65 POST, SUITE 1000
IRVINE, CA 92618
TEL: (949) 553-8566
www.eukongroup.com

DRAWN BY:	DH
CHECKED BY:	JG

REVISIONS:

REV	DATE	DESCRIPTION
1	07/29/19	ADD TITLE/DESIGN (LG/CK)
A	11/15/18	PRELIMINARY (DH)

ambit consulting
410 E. SOUTHERN AVE.
TEMPE, ARIZONA 85282
PH. (480) 659-4072
www.ambitconsulting.us

PROJECT INFORMATION:
CS_04176
300 ALBERO AVENUE
LOMPOC, CA 93436
SANTA BARBARA COUNTY

SHEET TITLE:
SITE SURVEY

SHEET NUMBER:
LS-1

LESSOR'S LEGAL DESCRIPTION

PARCEL OF LAND IN THE RANCHO MISSION DE LA PURISIMA, IN THE COUNTY OF SANTA BARBARA, STATE OF CALIFORNIA, DESCRIBED AS FOLLOWS:

ALL THAT PORTION OF LOT 5 LYING WITHIN THE BOUNDARIES OF THE LANDS DESCRIBED IN THAT CERTAIN DEED TO VANDENBERG VILLAGE DEVELOPMENT CORPORATION, A NEVADA CORPORATION, BY DEED RECORDED JULY 6, 1959 AS INSTRUMENT NO. 21762 IN BOOK 1641, PAGE 571 OF OFFICIAL RECORDS, SANTA BARBARA COUNTY RECORDER'S OFFICE, AND WHICH LIES:

A) NORTHERLY OF THE CENTER LINE OF THE LOMPOC CASMALIA ROAD AS DESCRIBED IN THE RIGHT OF WAY GRANTS TO THE COUNTY OF SANTA BARBARA RECORDED OCTOBER 24, 1957 AS INSTRUMENT NO. 21993 IN BOOK 1461, PAGE 212 AND RECORDED SEPTEMBER 11, 1962 AS INSTRUMENT NO. 37996 IN BOOK 1951, PAGE 366, BOTH OF OFFICIAL RECORDS;
B) WESTERLY OF TRACT NO. 10,233-2 AS PER MAP THEREOF RECORDED IN BOOK 59, PAGES 69 THROUGH 71 OF MAPS, IN THE OFFICE OF THE COUNTY RECORDER OF SANTA BARBARA COUNTY;
C) SOUTHERLY OF THE LAND CONVEYED TO LOMPOC UNIFIED SCHOOL DISTRICT BY DEED RECORDED JUNE 28, 1988 AS INSTRUMENT NO. 49236 IN BOOK 2079, PAGE 1209 OF OFFICIAL RECORDS;
D) NORTHERLY AND NORTHWESTERLY OF THE LAND CONVEYED TO THE COUNTY OF SANTA BARBARA BY DEED RECORDED NOVEMBER 9, 1962 AS INSTRUMENT NO. 42679 IN BOOK 1981, PAGE 1383 OF OFFICIAL REPORTS.
EXCEPTING AND RESERVING TO UNION OIL COMPANY, OF CALIFORNIA, ITS SUCCESSORS AND ASSIGNS, ALL OIL, GAS, PETROLEUM AND OTHER HYDROCARBON SUBSTANCES, MINERALS AND WATER IN, UNDER OR RECOVERABLE FROM THE PORTION OF SURFACE OF THE ABOVE DESCRIBED LAND LYING BELOW A PLANE PARALLEL TO AND 500 FEET VERTICALLY BELOW THE SURFACE OF SAID LAND, AND THE RIGHT TO REMOVE FROM, STORE IN AND INJECT INTO SAID PORTION OF THE SUBSURFACE OF SAID LAND, OIL, GAS, PETROLEUM AND OTHER HYDROCARBON SUBSTANCES, MINERALS AND WATER; AND EXCEPTING AND RESERVING TO GRANTOR, ITS SUCCESSORS AND ASSIGNS, RIGHT OF WAY EASEMENTS AND SERVITUDES IN AND THROUGH SAID PORTION OF THE SUBSURFACE OF SAID LAND FOR THE PURPOSES OF EXERCISING THE RIGHTS HEREIN EXCEPTED AND RESERVED, INCLUDING BUT NOT LIMITED TO THE RIGHT FROM TIME TO TIME TO DRILL WELL HOLES, TO CASE SAME AND OTHERWISE TO COMPLETE AND MAINTAIN WELLS INTO AND THROUGH SAID PORTION OF THE SUBSURFACE OF SAID LAND FROM SURFACE LOCATIONS OUTSIDE OF SAID LAND, PROVIDED, HOWEVER, THAT THE RIGHTS HEREIN EXCEPTED AND RESERVED DO NOT AND SHALL NOT INCLUDE THE RIGHT TO ENTER UPON THE SURFACE OF SAID AND OR ANY PORTION THEREOF LYING ABOVE A PLANE PARALLEL TO AND 500 FEET VERTICALLY BELOW THE SURFACE OF SAID LAND, AND DO NOT AND SHALL NOT INCLUDE THE RIGHT TO INJECT OR STORE OIL, GAS, PETROLEUM OR OTHER HYDROCARBON SUBSTANCES, MINERALS OR WATER INTO OR IN ANY PORTION OF SAID LAND LYING ABOVE A PLANE PARALLEL TO AND 500 FEET VERTICALLY BELOW THE SURFACE OF SAID LAND, AS RESERVED IN CORPORATION GRANT DEED
BY UNION OIL COMPANY OF CALIFORNIA AND RECORDED JULY 6, 1959 AS INSTRUMENT NO. 21762 IN BOOK 1641, PAGE 571 AND IN DEED RECORDED NOVEMBER 3, 1961 AS INSTRUMENT NO. 39600 IN BOOK 1882, PAGE 360, BOTH OF OFFICIAL RECORDS.

AND BEING THE SAME PROPERTY CONVEYED TO COUNTY OF SANTA BARBARA FROM STEPHEN BELL, TRUSTEE OF THE BELL FAMILY TRUST DATED SEPTEMBER 18, 1988 ALTA M. COLVIN, SUCCESSOR TRUSTEE OF THE LA VARR COLVIN DDS, INC. PENSION PLAN AND CHARLES GOLDSTEIN AND SHARON GOLDSTEIN, AND R. BAUBERT BY GRANT DEED DATED JULY 29, 1997 AND RECORDED SEPTEMBER 04, 1997 IN INSTRUMENT NO. 97-51379.

NOTES CORRESPONDING TO TITLE SEARCH DISCLOSURES

REFERENCE IS MADE TO FIDELITY NATIONAL TITLE INSURANCE COMPANY ORDER NO: 29013342, DATED MAY 24, 2019. ALL EASEMENTS CONTAINED WITHIN SAID GUARANTEE AFFECTING THE IMMEDIATE AREA SURROUNDING THE LEASE HAVE BEEN PLOTTED. ITEMS 2 & 3 ARE SHOWN HEREON AS PARENT PARCEL LINES. ITEM 1 IS NOT A SURVEY RELATED ITEM.

2. MAP RECORDED IN MAP BOOK 57, PAGE 48.
(AS SHOWN ON SURVEY)

3. MAP RECORDED IN MAP BOOK 59, PAGE 69.
(AS SHOWN ON SURVEY)

4. IN FAVOR OF: COUNTY OF SANTA BARBARA
RECORDED ON: 09/11/1962
RECORDED IN: DEED BOOK 1951, PAGE 366
(NOT SHOWN - EXCEPTION INDETERMINATE)

SURVEYOR'S NOTES

SURVEYOR HAS NOT PERFORMED A SEARCH OF PUBLIC RECORDS TO DETERMINE ANY DEFECT IN TITLE ISSUED.

THE BOUNDARY SHOWN HEREON IS PLOTTED FROM RECORD INFORMATION AND DOES NOT CONSTITUTE A BOUNDARY SURVEY OF THE PROPERTY. SUFFICIENT INFORMATION WAS NOT AVAILABLE AT THE TIME OF SURVEY TO MAP THE ENTIRE PARENT PARCEL. ONLY PORTIONS WERE ABLE TO BE MAPPED AS SHOWN HEREON.

ALL DISTANCES SHOWN HEREON ARE GRID DISTANCES.

CONTOURS DERIVED FROM DIRECT FIELD OBSERVATIONS AND FOLLOWS THE CURRENT NATIONAL MAP STANDARDS FOR VERTICAL ACCURACY.

LEASE AREA LEGAL DESCRIPTION

A PORTION OF THAT CERTAIN PROPERTY CONVEYED TO COUNTY OF SANTA BARBARA FROM STEPHEN BELL, TRUSTEE OF THE BELL FAMILY TRUST DATED SEPTEMBER 18, 1988 ALTA M. COLVIN, SUCCESSOR TRUSTEE OF THE LA VARR COLVIN DDS, INC. PENSION PLAN AND CHARLES GOLDSTEIN AND SHARON GOLDSTEIN, AND R. BAUBERT BY GRANT DEED DATED JULY 29, 1997 AND RECORDED SEPTEMBER 04, 1997 IN INSTRUMENT NO. 97-51379, OFFICIAL RECORDS OF SANTA BARBARA, CALIFORNIA BEING MORE PARTICULARLY DESCRIBED AS FOLLOWS:

COMMENCING AT THE APPARENT CENTERLINE INTERSECTION OF SIRIUS AVENUE AND ALBIERO AVENUE SAID POINT BEING ON A CURVE WHOSE CENTER POINT BEARS SOUTH 88°42'30" EAST, 500.00 FEET, FROM WHICH THE APPARENT CENTERLINE INTERSECTION OF SIRIUS AVENUE AND PEGASUS AVENUE BEARS THE FOLLOWING TWO COURSES:
1. SOUTHERLY ALONG SAID 500' RADIUS CURVE, THROUGH A CENTRAL ANGLE OF 32°32'59", AN ARC DISTANCE OF 284.05 (CHORD SOUTH 12°58'59" EAST, 280.25 FEET);
2. THENCE SOUTH 29°15'30" EAST, 170.16 FEET;

THENCE FROM SAID POINT OF COMMENCEMENT NORTH 88°42'30" WEST, 134.14 FEET TO THE SOUTHERLY TERMINUS OF ALBIERO AVENUE AND THE EASTERLY BOUNDARY OF SAID PROPERTY; THENCE DEPARTING SAID EASTERLY BOUNDARY NORTH 74°10'31" WEST, 633.85 FEET TO THE POINT OF BEGINNING; THENCE NORTH 76°27'16" WEST, 6.81 FEET TO A POINT OF NON-TANGENT CURVE WHOSE CENTER POINT BEARS NORTH 04°07'26" WEST, 10.50 FEET; THENCE WESTERLY ALONG SAID CURVE THROUGH A CENTRAL ANGLE OF 35°20'19", AN ARC DISTANCE OF 6.48 FEET (CHORD NORTH 76°27'16" WEST, 6.37 FEET); THENCE NORTH 76°27'16" WEST, 6.81 FEET; THENCE NORTH 13°32'44" EAST, 6.80 FEET TO A POINT OF NON-TANGENT CURVE WHOSE CENTER POINT BEARS NORTH 85°47'34" EAST, 10.50 FEET; THENCE NORTHERLY ALONG SAID CURVE THROUGH A CENTRAL ANGLE OF 35°30'20", AN ARC DISTANCE OF 6.51 FEET (CHORD NORTH 13°32'44" EAST, 6.40 FEET); THENCE NORTH 13°32'44" EAST, 23.30 FEET; THENCE SOUTH 76°27'16" EAST, 20.00 FEET; THENCE SOUTH 13°32'44" WEST, 23.30 FEET TO A POINT OF NON-TANGENT CURVE WHOSE CENTER POINT BEARS SOUTH 85°47'34" WEST, 10.50 FEET; THENCE SOUTHERLY ALONG SAID CURVE THROUGH A CENTRAL ANGLE OF 35°30'20", AN ARC DISTANCE OF 6.51 FEET (CHORD SOUTH 13°32'44" WEST, 6.40 FEET); THENCE SOUTH 13°32'44" WEST, 6.80 FEET TO THE POINT OF BEGINNING.

CONTAINING 736 SQUARE FEET (0.02 ACRES) OF LAND, MORE OR LESS.

ACCESS NOTE

RESERVING NONEXCLUSIVE RIGHT OF USE ACROSS LESSOR'S PROPERTY FOR NECESSARY APPURTENANCES TO CONSTRUCT, OPERATE, AND MAINTAIN A COMMUNICATION FACILITY FOR ITEMS SUCH AS, BUT NOT LIMITED TO INGRESS, EGRESS, PARKING, VEHICULAR MANEUVERING, EQUIPMENT, AND UTILITIES

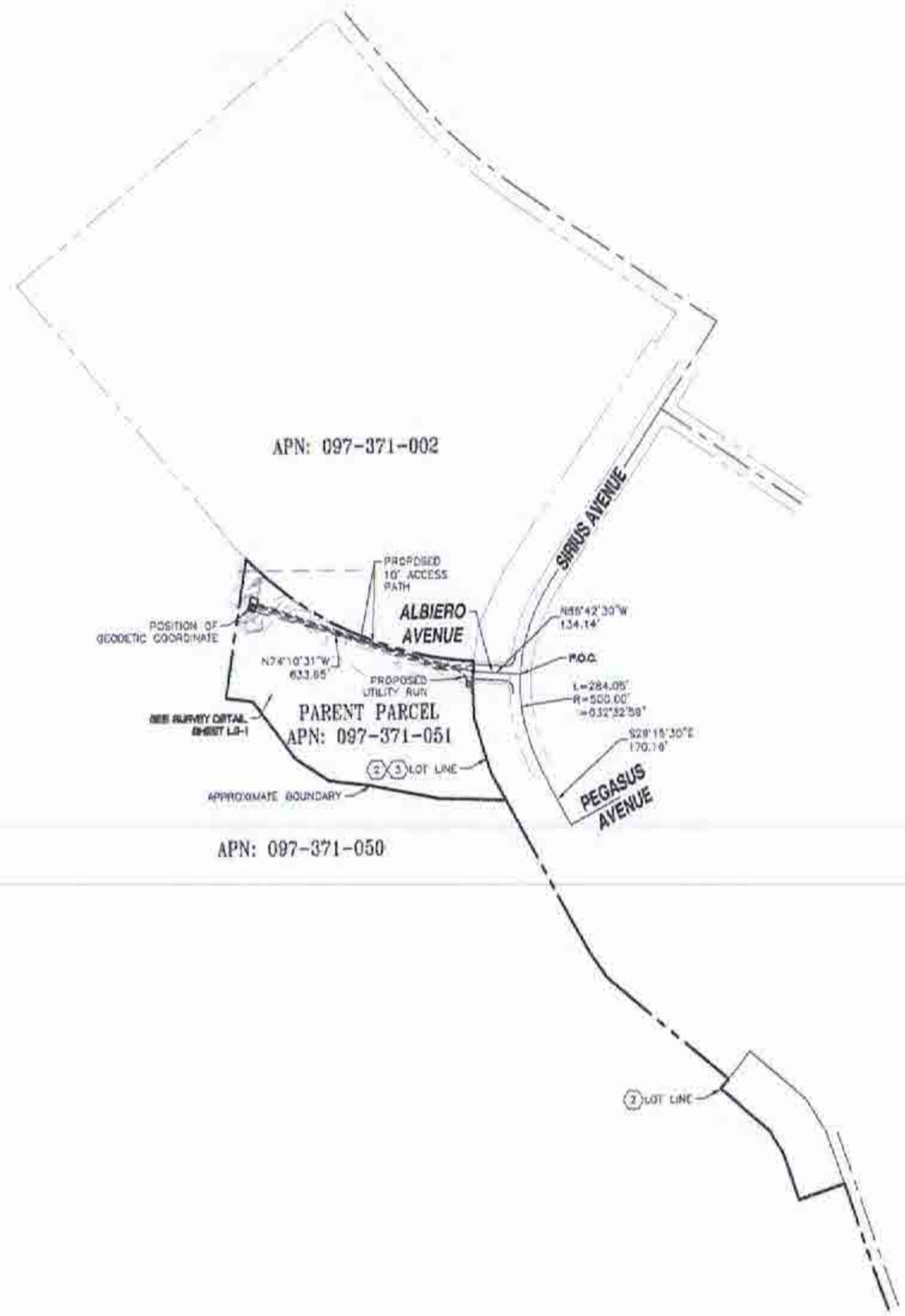

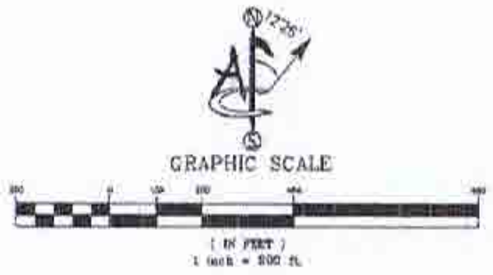

FOR EXAMINATION ONLY

APPLICANT:

The new at&t
1452 EDINGER AVENUE
3RD FLOOR
TUSTIN, CA 92780

ENGINEER:

Eukon
an SFC Communications, Inc. Company
65 POST, SUITE 1000
IRVINE, CA 92618
TEL: (949) 553-8566
www.eukongroup.com

DRAWN BY:	DH
CHECKED BY:	JC

REVISIONS:

REV	DATE	DESCRIPTION

SCALE NOTE:
IF DIMENSIONS SHOWN ON PLAN DO NOT SCALE CORRECTLY, CHECK FOR REDUCTION OR ENLARGEMENT FROM ORIGINAL PLANS

NOTES:
1. POWER DESIGN AND RUN IS PRELIMINARY, PENDING FINAL DESIGN FROM UTILITY PROVIDERS.
2. UNDERGROUND WATER LINE NOT ABLE TO BE LOCATED IN FIELD SURVEY USING GROUND PENETRATING RADAR, VERIFY IN FIELD BEFORE START OF TRENCHING.

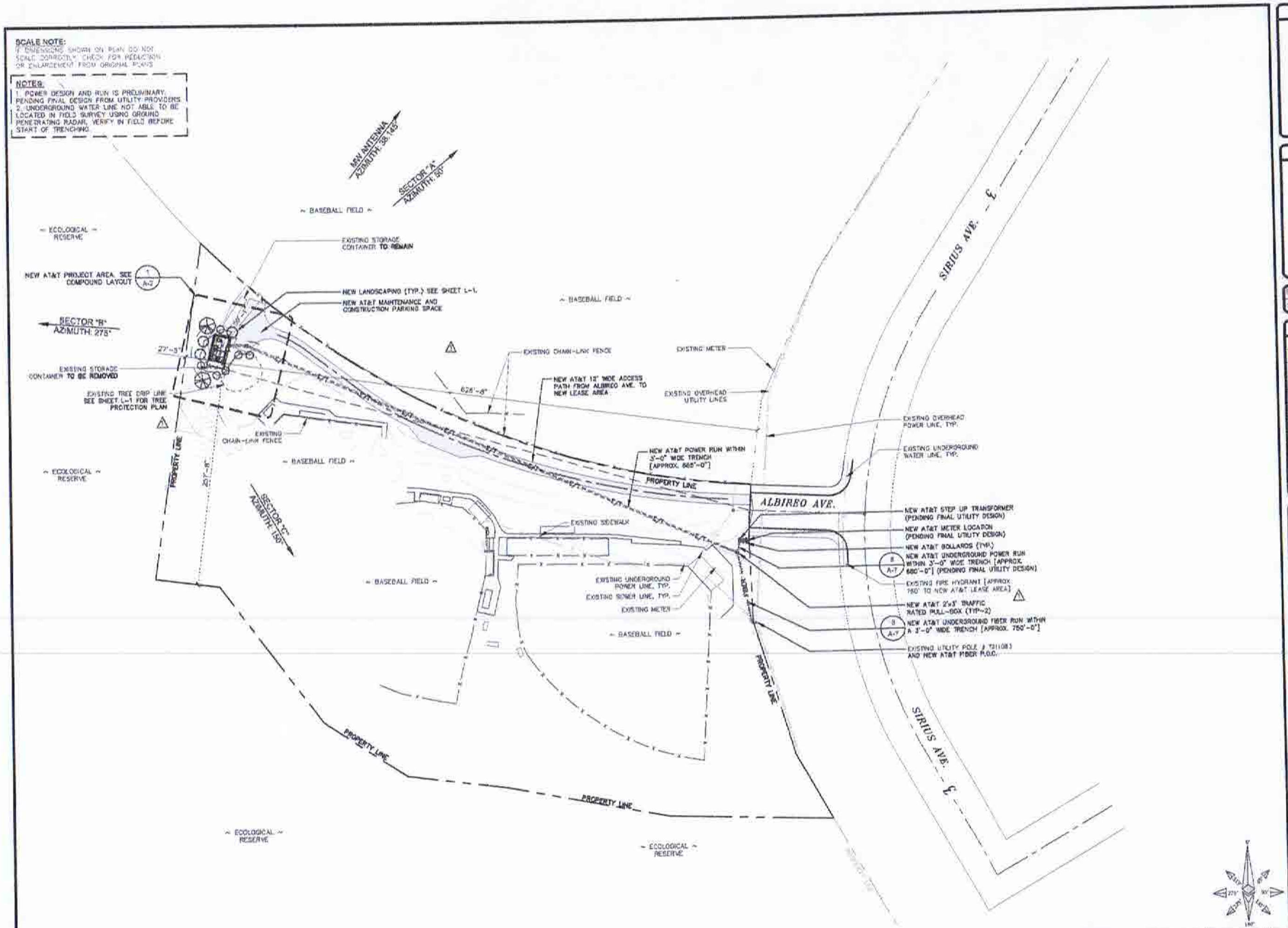

SITE PLAN

APPLICANT

The NEW at&t
1452 EDINGER AVE., 3RD FLOOR
TUSTIN, CA 92780

ENGINEER:

Eukon
an SFG Communications, Inc. Company
65 POST, SUITE 1000
IRVINE, CA 92618
TEL: (949) 553-8566
www.eukongroup.com

DRAWN BY: AC
CHECKED BY: AC

REVISIONS

REV	DATE	DESCRIPTION
C	11/18/20	100% CONSTRUCTION DRAWING
A	11/03/20	90% CONSTRUCTION DRAWING

LICENSEE

DATE SIGNED: 11-19-20

PROJECT INFORMATION

CSL04176
300 ALBIREO AVE.
LOMPOC, CA 93436

SHEET TITLE:

SITE PLAN

SHEET NUMBER:

A-1

SCALE NOTE:
IF DIMENSIONS SHOWN ON PLAN DO NOT SCALE CORRECTLY, CHECK FOR REDUCTION OR ENLARGEMENT FROM ORIGINAL PLAN.

NOTE:
EXISTING STORAGE CONTAINER TO BE REMOVED NOT SHOWN FOR CLARITY.

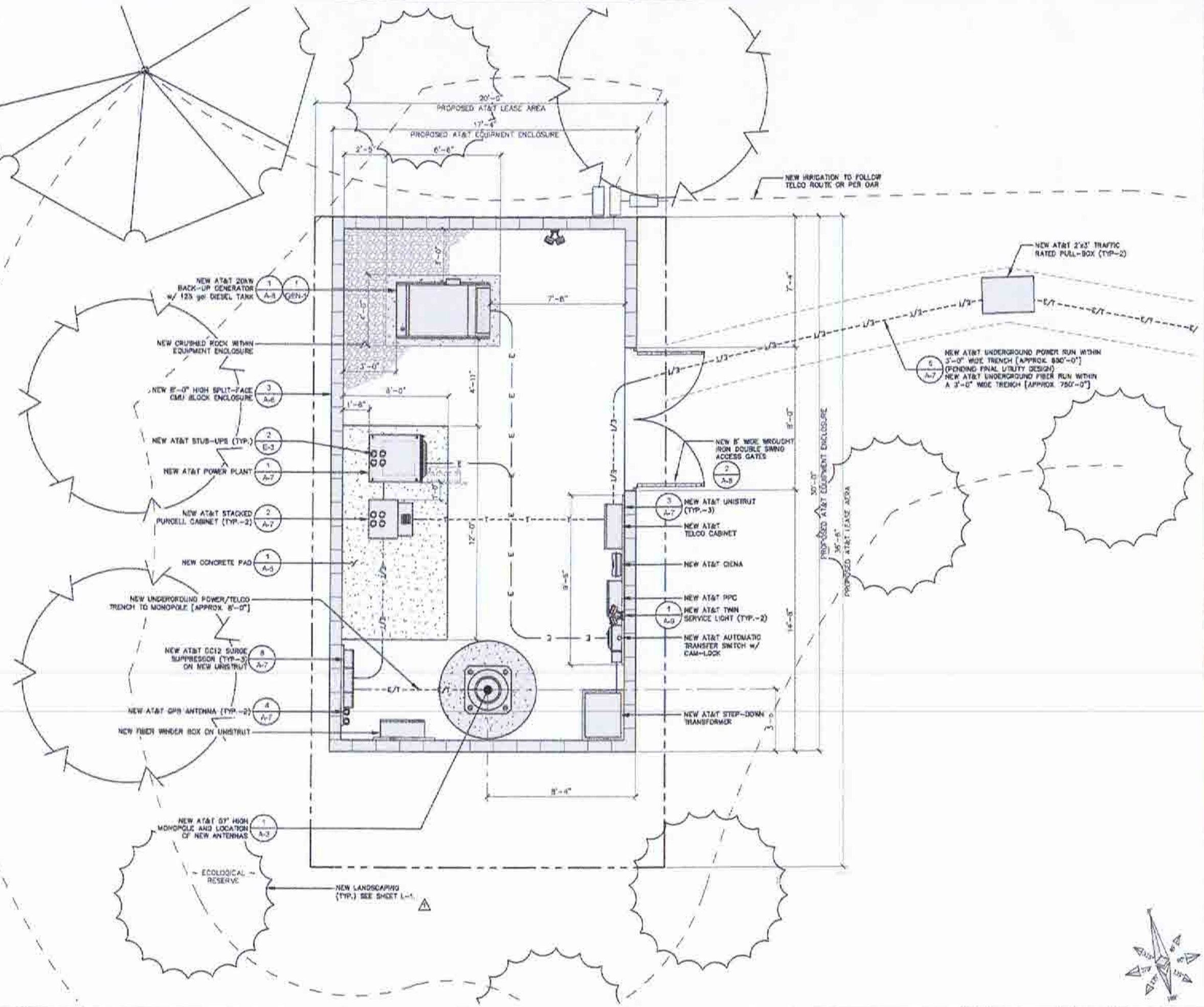

NEW COMPOUND PLAN

SCALE 3/8"=1'-0"

1

APPLICANT:

The NEW at&t
1452 EDINGER AVE., 3RD FLOOR
TUSTIN, CA 92780

ENGINEER:

Eukon
an SFC Communications, Inc. Company
65 POST, SUITE 1000
IRVINE, CA 92618
TEL. (949) 553-8566
www.eukongroup.com

DRAWN BY:	AG
CHECKED BY:	AG

REVISIONS:

REV	DATE	DESCRIPTION
0	11/10/20	100% CONSTRUCTION DRAWING
A	11/03/20	90% CONSTRUCTION DRAWING

LICENSEE:

DATE SIGNED: 11-10-20

PROJECT INFORMATION:

CS_04176
300 ALBIREO AVE.
LOMPOC, CA 93436

SHEET TITLE:

NEW COMPOUND

SHEET NUMBER:

A-2

OPTIMUM ANTENNA REQUIREMENTS (VERIFY WITH CURRENT RFDS)

	SECTOR	NEW ANTENNA					TRANSMISSION CABLE	
		TECHNOLOGY	MODEL	SIZE	ANTENNA AZIMUTH	RAD CENTER	LENGTH	COUNT
BETA SECTOR	B1	LTE	KATHREIN 800-10980K	8'	50°	55'	±80'	1 FIBER 3 POWER
	B2	LTE	QUINTEL QS8658-3e	8'	50°	55'		
	B3	LTE	QUINTEL QS8658-3e	8'	50°	55'		
	B4	LTE	QUINTEL QS8658-3e	8'	50°	55'		
ALPHA SECTOR	A1	LTE	QUINTEL QS8658-3e	8'	150°	55'	±80'	1 FIBER 3 POWER
	A2	LTE	QUINTEL QS8658-3e	8'	150°	55'		
	A3	LTE	QUINTEL QS8658-3e	8'	150°	55'		
	A4	LTE	KATHREIN 800-10980K	8'	150°	55'		
GAMMA SECTOR	C1	LTE	KATHREIN 800-10980K	8'	275°	55'	±80'	1 FIBER 3 POWER
	C2	LTE	QUINTEL QS8658-3e	8'	275°	55'		
	C3	LTE	QUINTEL QS8658-3e	8	275°	55'		
	C4	LTE	QUINTEL QS8658-3e	8'	275°	55'		

REMOTE RADIO UNITS

	SECTOR	RRU TYPE	RRU LOCATION (DISTANCE FROM ANTENNA)	MINIMUM CLEARANCES ABOVE	BELOW	SIDES
ALPHA SECTOR	A1	ERICSSON RRUS – 4449 B5/B12	±15'	18"	6"	0"
	A1	ERICSSON RRUS – 8843 B2/B66A	±15'	18"	6"	0"
	A1	–	–	–	–	–
	A2	ERICSSON RRUS – 4478 B14	±15'	18"	6"	0"
	A2	–	–	–	–	–
	A2	–	–	–	–	–
	A3	–	–	–	–	–
	A3	–	–	–	–	–
	A3	–	–	–	–	–
	A4	ERICSSON RRUS – 32 B29	±15'	18"	6"	0"
	A4	ERICSSON RRUS – 4415 B30	±15'	18"	6"	0"
	A4	–	–	–	–	–
BETA SECTOR	B1	ERICSSON RRUS – 4449 B5/B12	±15'	18"	6"	0"
	B1	ERICSSON RRUS – 8843 B2/B66A	±15'	18"	6"	0"
	B1	–	–	–	–	–
	B2	ERICSSON RRUS – 4478 B14	±15'	18"	6"	0"
	B2	–	–	–	–	–
	B2	–	–	–	–	–
	B3	–	–	–	–	–
	B3	–	–	–	–	–
	B3	–	–	–	–	–
	B4	ERICSSON RRUS – 32 B29	±15'	18"	6"	0"
	B4	ERICSSON RRUS – 4415 B30	±15'	18"	6"	0"
	B4	–	–	–	–	–
GAMMA SECTOR	C1	ERICSSON RRUS – 4449 B5/B12	±15'	18"	6"	0"
	C1	ERICSSON RRUS – 8843 B2/B66A	±15'	18"	6"	0"
	C1	–	–	–	–	–
	C2	ERICSSON RRUS – 4478 B14	±15'	18"	6"	0"
	C2	–	–	–	–	–
	C2	–	–	–	–	–
	C3	–	–	–	–	–
	C3	–	–	–	–	–
	C3	–	–	–	–	–
	C4	ERICSSON RRUS – 32 B29	±15'	18"	6"	0"
	C4	ERICSSON RRUS – 4415 B30	±15'	18"	6"	0"
	C4	–	–	–	–	–

SURGE SUPPRESSION SYSTEM

SYSTEM	MANUFACTURER	PART NUMBER	QTY	LOCATION
	RAYCAP	DC12-48-48-60-0-25E	3	MOUNTED ONTO INSIDE OF NEW GND WALL ENCLOSURE
	RAYCAP	DC9-48-60-24-8C-EV	3	MOUNTED ONTO NEW MONOPINE

NOTES TO CONTRACTOR

1. CONTRACTOR IS TO REFER TO AT&T'S MOST CURRENT RADIO FREQUENCY DATA SHEET (RFDS) PRIOR TO CONSTRUCTION
2. CABLE LENGTHS HERE DETERMINED BASED ON A VISUAL INSPECTION DURING SITE WALK. CONTRACTOR TO VERIFY ACTUAL LENGTH DURING PRE-CONSTRUCTION WALK.
3. CONTRACTOR TO USE ROSENBERGER FIBER LINE HANGER COMPONENTS FOR ENGINEER APPROVED EQUAL)
4. CONTRACTOR TO USE CABLES SPECIFIED, (OR ENGINEER APPROVED EQUAL).

SCALE NOTE:
IF DIMENSIONS SHOWN ON PLAN DO NOT SCALE CORRECTLY, CHECK FOR REDUCTION OR ENLARGEMENT FROM ORIGINAL PLANS.

NOTE:
ALL ANTENNAS AND RELATED EQUIPMENT TO BE PAINTED TO MATCH MONOPOLE.

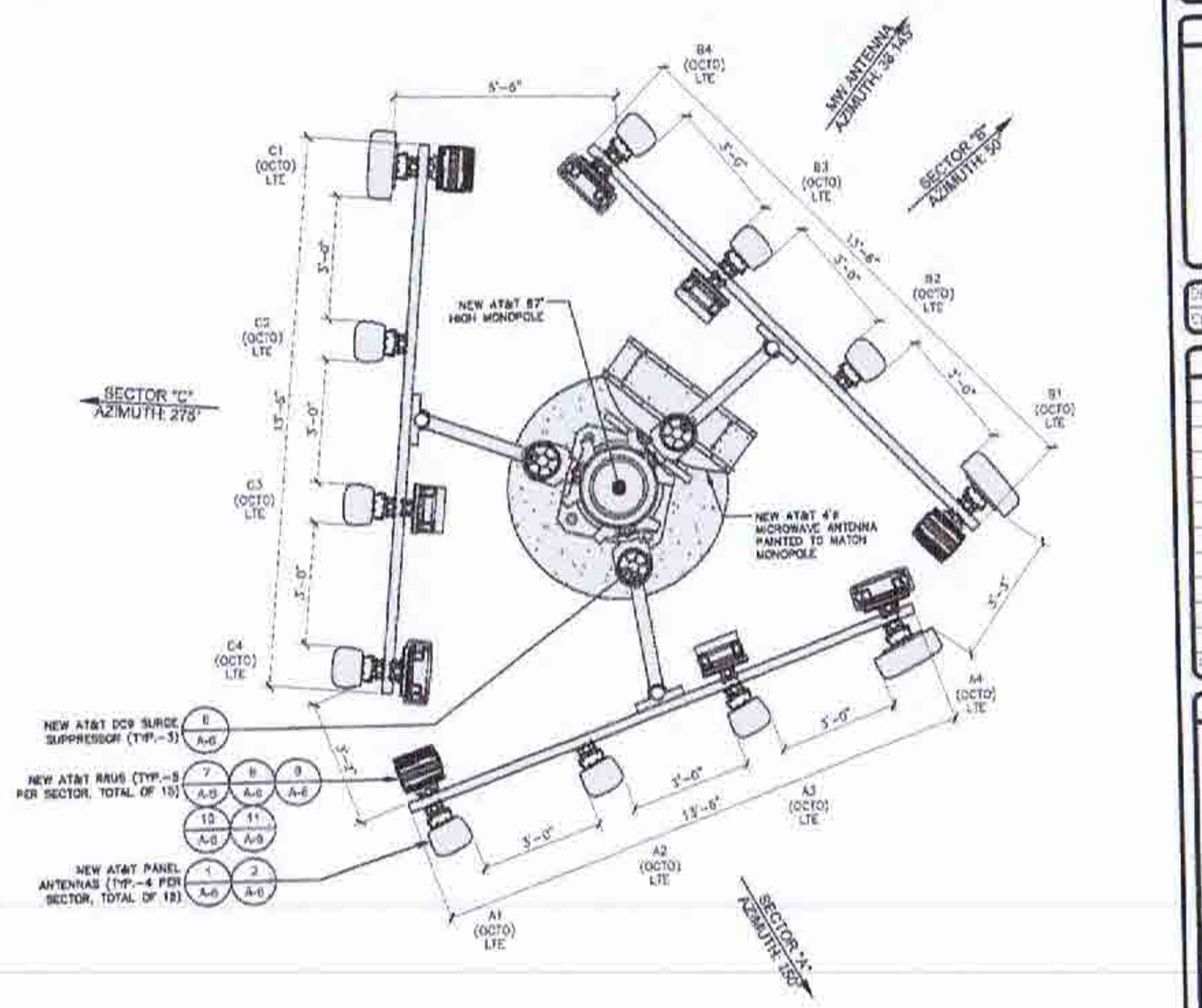

NEW ANTENNA AND RRU SCHEDULE — SCALE NONE — 1

NEW ANTENNA LAYOUT — SCALE 1/2"=1'-0" — 2

APPLICANT

The NEW at&t
1452 EDINGER AVE., 3RD FLOOR
TUSTIN, CA 92780

ENGINEER

Eukon
an SPO Communications, Inc. Company
65 POST, SUITE 1000
IRVINE, CA 92618
TEL: (949) 553-8566
www.eukongroup.com

DRAWN BY: AC
CHECKED BY: AC

REVISIONS

REV	DATE	DESCRIPTION
0	11/10/20	100% CONSTRUCTION DRAWING
A	11/03/20	90% CONSTRUCTION DRAWING

LICENSE

DATE SIGNED 11-19-20

PROJECT INFORMATION

CSL04176
300 ALBIREO AVE.
LOMPOC, CA 93436

SHEET TITLE

ANTENNA AND RRU SCHEDULE/ANTENNA LAYOUT

SHEET NUMBER

A-3

SCALE NOTE:
IF DIMENSIONS SHOWN ON PLAN DO NOT SCALE CORRECTLY, CHECK FOR REDUCTION OR ENLARGEMENT FROM ORIGINAL PLANS

NOTE:
EXISTING STORAGE CONTAINER TO BE REMOVED NOT SHOWN FOR CLARITY.

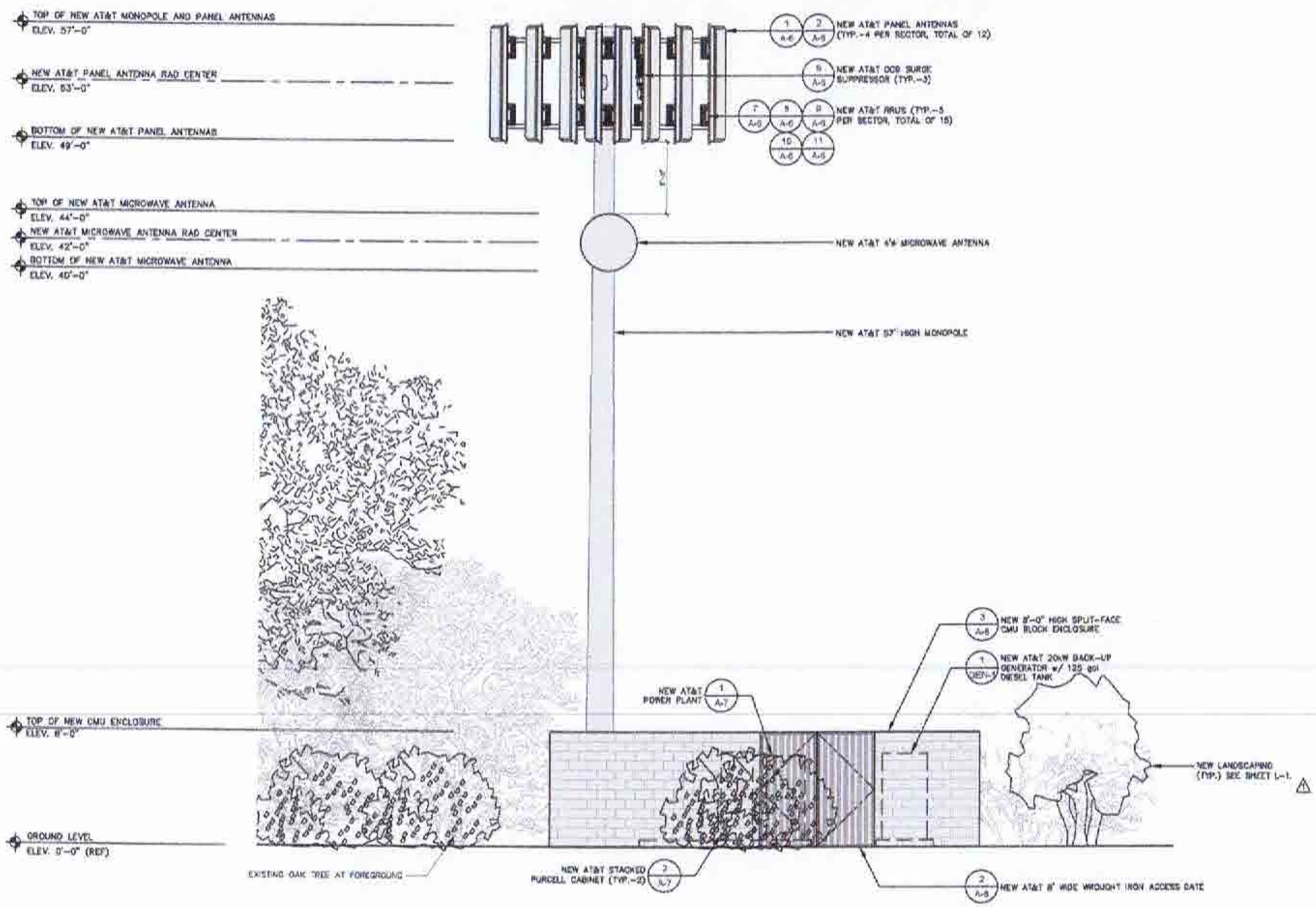

NEW SOUTHEAST ELEVATION

SCALE 1/4"=1'-0"

1

APPLICANT:

The NEW at&t
1452 EDINGER AVE., 3RD FLOOR
TUSTIN, CA 92780

ENGINEER:

Eukon
an EPIC Communications, Inc. Company
65 POST, SUITE 1000
IRVINE, CA 92618
TEL: (949) 553-8566
www.eukongroup.com

DRAWN BY:	AG
CHECKED BY:	AG

REVISIONS

REV.	DATE	DESCRIPTION
B	11/19/20	100% CONSTRUCTION DRAWING
A	11/03/20	90% CONSTRUCTION DRAWING

LICENSEE

DATE SIGNED 11-19-20

PROJECT INFORMATION:

CSL04176
300 ALBIREO AVE.
LOMPOC, CA 93436

SHEET TITLE

NEW SOUTHEAST ELEVATION

SHEET NUMBER

A-4

SCALE NOTE:
IF DIMENSIONS SHOWN ON PLAN DO NOT SCALE CORRECTLY, CHECK FOR REDUCTION OR ENLARGEMENT FROM ORIGINAL PLANS.

NOTE:
EXISTING STORAGE CONTAINER TO BE REMOVED NOT SHOWN FOR CLARITY.

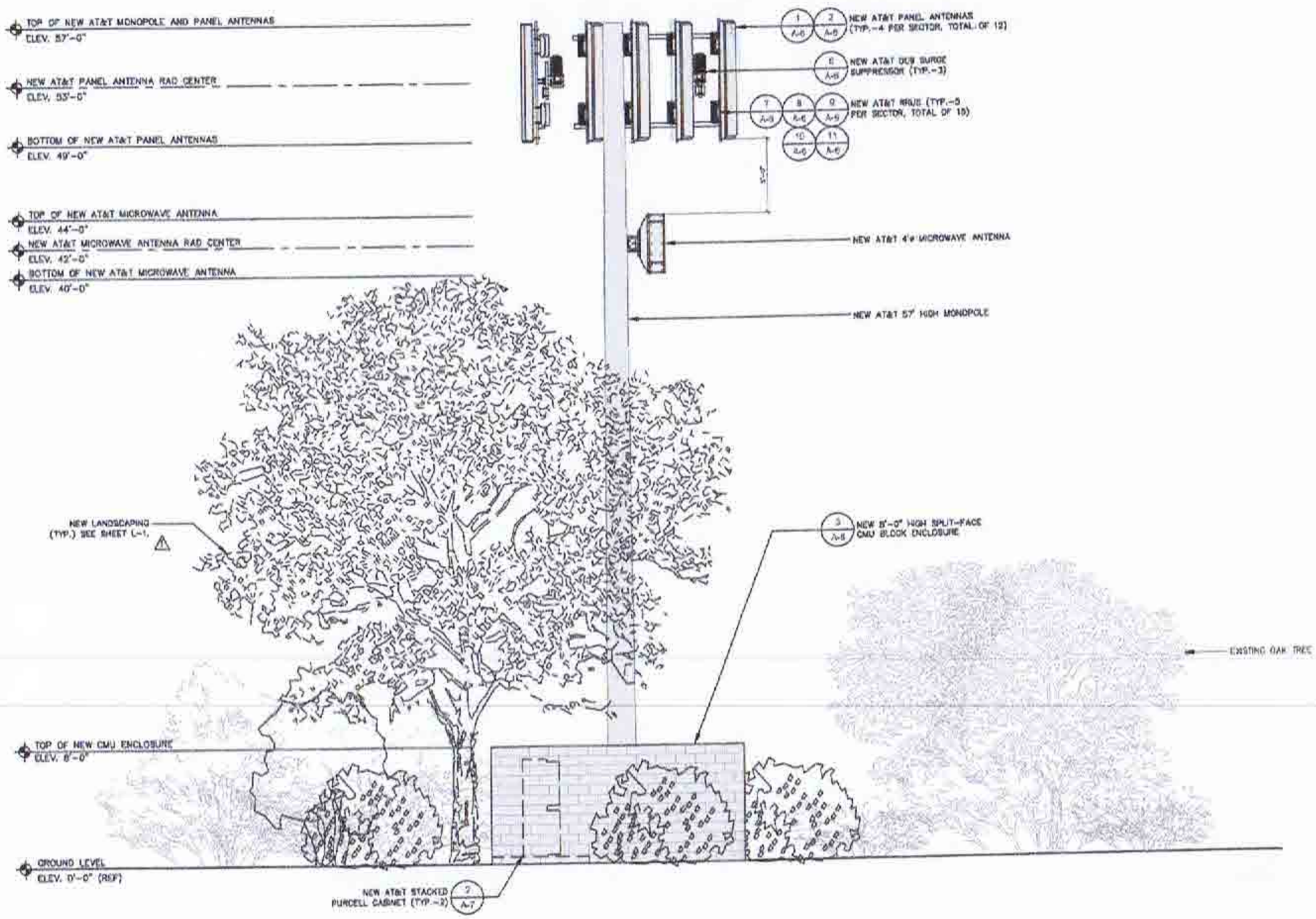

NEW SOUTHWEST ELEVATION

SCALE 1/4"=1'-0"

1

APPLICANT:

The NEW at&t

1452 EDINGER AVE., 3RD FLOOR
TUSTIN, CA 92780

ENGINEER:

Eukon
an SFC Communications, Inc. Company
65 POST, SUITE 1000
IRVINE, CA 92618
TEL: (949) 553-8566
www.eukongroup.com

DRAWN BY:	AG
CHECKED BY:	AC

REVISIONS:

REV.	DATE	DESCRIPTION
C	11/12/20	100% CONSTRUCTION DRAWING
A	11/03/20	80% CONSTRUCTION DRAWING

LICENSEE:

DATE SIGNED: 11-19-20

PROJECT INFORMATION:

CSL04176
300 ALBIREO AVE.
LOMPOC CA 93436

SHEET TITLE:

NEW SOUTHWEST ELEVATION

SHEET NUMBER:

A-5

KATHREIN - 800-10966K

INPUT:	5 x 4.3-10 FEMALE
CONNECTOR POSITION:	BOTTOM
ADJUSTMENT MECHANISM:	FINE-TILT, CONTINUOUSLY ADJUSTABLE
WIND LOAD (AT RATED WIND SPEED 150km/h):	MAXIMUM 1405 N/316 lbf FRONTAL 1400 N/315 lbf
MAX. WIND VELOCITY:	241 km/h / 150 mph
DIMENSIONS (L×W×D):	96.0 × 20.0 × 6.9 INCHES (2438 × 508 × 175 mm)
CATEGORY OF MOUNTING HARDWARE:	XH (X-HEAVY)
WEIGHT:	80.0 kg / 97.0 kg (CLAMPS INCL.) 176.4 lb / 123.7 lb (CLAMPS INCL.)

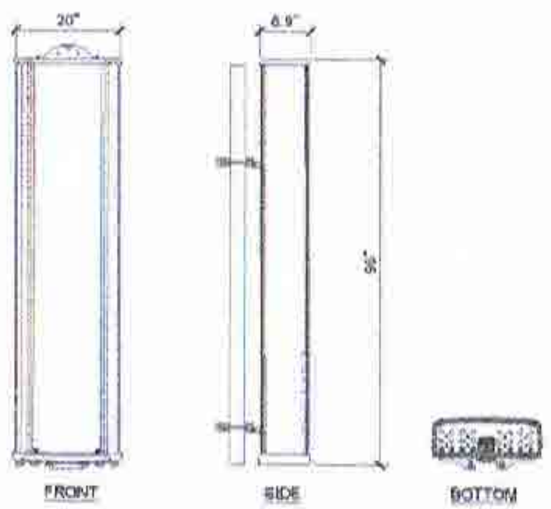

ANTENNA | 1

QUINTEL - QS8658-3e

DIMENSIONS (L×W×D):	96.06" × 12" × 6.6" (2438mm × 304mm × 243mm)
WEIGHT WITH MOUNTING:	173.4 lbs (51.4 kg)
NO. OF CONNECTORS:	8x 7/16 DIN FEMALE LONG NECK
MAX WIND SPEED:	150mph (67 m/s)
FRONT WIND LOAD:	352 N (79.2 lbs)
SIDE WIND LOAD:	695 N (156 lbs)

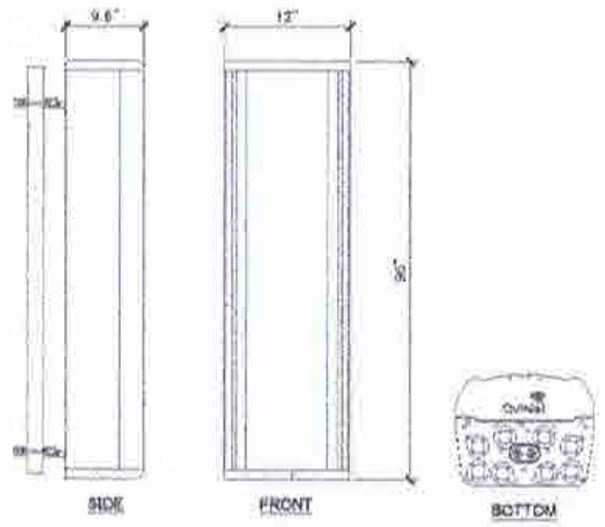

ANTENNA | 2

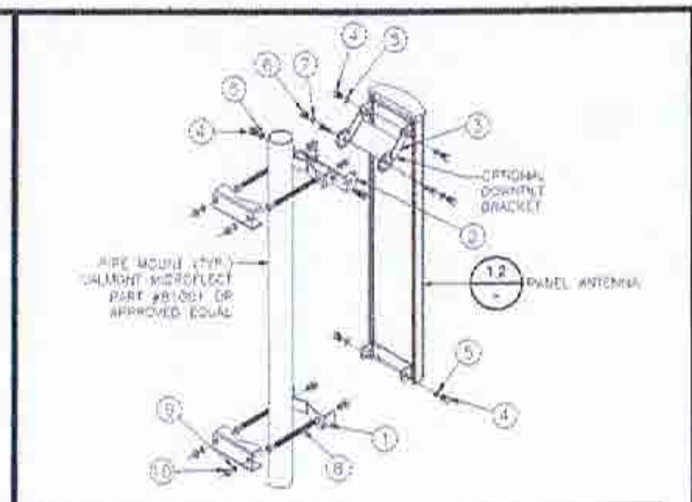

NOTES:
1. INSERT SCISSOR BRACKETS BETWEEN THE UPPER ANTENNA MOUNTING BRACKET AND THE UPPER POLE ADAPTER BRACKET. SECURE USING 1/2 INCH HARDWARE PROVIDED.
2. TO SET THE DEGREE OF DOWNTILT, ALIGN THE DESIRED HOLES ON THE SCISSOR BRACKETS AND SECURE WITH 5/16 INCH HARDWARE PROVIDED.
3. THE NUMBER OF CONNECTORS WILL VARY BASED ON ANTENNA TYPE.

ITEM	QTY	DESCRIPTION
1	1	ADAPTER, POLE, LOWER
2	1	BRACKET, DOWNTILT, POLE
3	1	BRACKET, DOWNTILT, ANTENNA
4	6	1/2 x 3 HEX HEAD BOLT
5	6	1/2 SPLIT WASHER
6	2	5/16 x 1 HEX HEAD BOLT
7	2	5/16 SPLIT WASHER
8	4	1/2" THREADED ROD
9	8	1/2" SPLIT WASHER
10	12	1/2" NUT

ANTENNA MOUNTING | 3

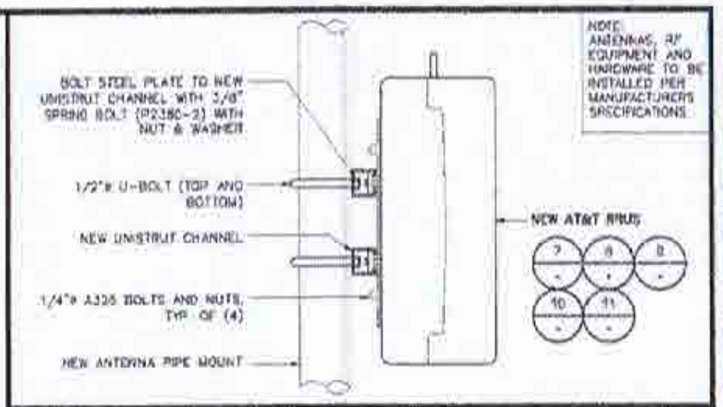

NOTE: ANTENNAS, RF EQUIPMENT AND HARDWARE TO BE INSTALLED PER MANUFACTURER'S SPECIFICATIONS.

RRU MOUNTING | 4

ERICSSON BASEBAND - 6630

DIMENSIONS (H×W×D):	44.45/762.6×330 (mm) (1.75"×19"×13.78")
TEMPERATURE:	0 TO +55°C
RELATIVE HUMIDITY:	5-95%
ABSOLUTE HUMIDITY:	1-29 g/m³

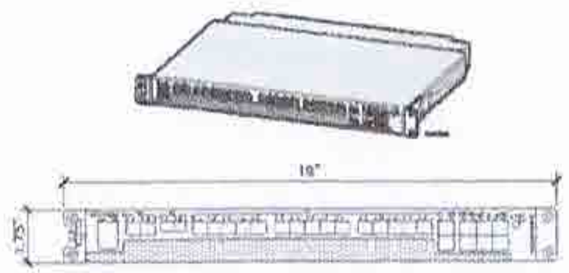

BBU-6630 | 5

RAYCAP DC9-48-60-24-8C-EV

DIMENSIONS (L×W×D):	280×810 mm (11"×24")
NOMINAL OPERATING VOLTAGE:	48 VDC
NOMINAL DISCHARGE CURRENT:	20 kA 8/20 µs
MAXIMUM DISCHARGE CURRENT:	60 kA 8/20 µs
MAXIMUM CONTINUOUS OPERATING VOLTAGE:	75 VDC
VOLTAGE PROTECTION RATING:	400V
WIND LOADING:	150 MPH (SUSTAINED) 125 MPH (GUST)
TOTAL WEIGHT:	32.8 LBS

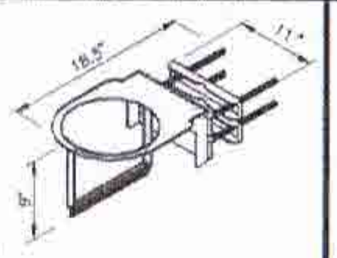

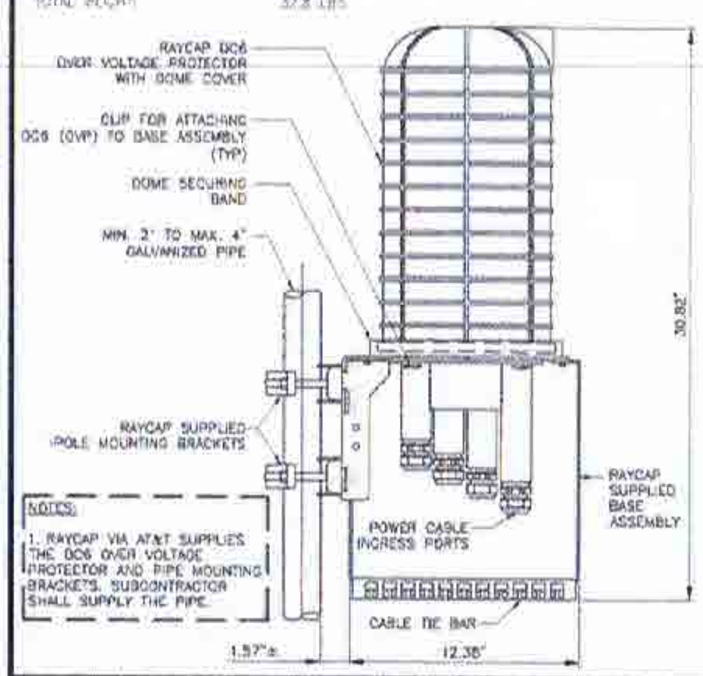

NOTES:
1. RAYCAP VIA AT&T SUPPLIES THE DC9 OVER VOLTAGE PROTECTOR AND PIPE MOUNTING BRACKETS. SUBCONTRACTOR SHALL SUPPLY THE PIPE.

DC SURGE SUPPRESSION | 6

ERICSSON RRUS - 4415 B30

DIMENSIONS (H×W×D): 13.19" × 5.36" × 14.96"
POWER CONSUMPTION: 4 × 90W
WEIGHT: 64 LBS. EXCL. MOUNTING HARDWARE

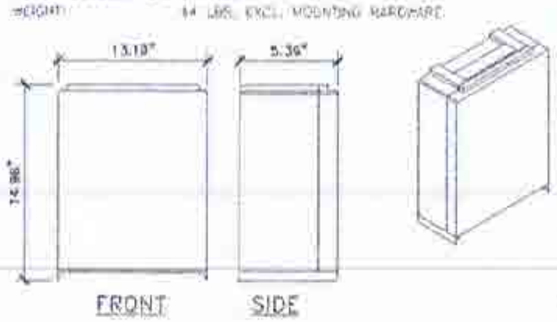

RRU-4415 B30 | 7

ERICSSON RRUS - 4478 B14

DIMENSIONS (H×W×D): 18.9" × 13.4" × 7.7"
POWER CONSUMPTION: 805W
WEIGHT: 55.9 LBS

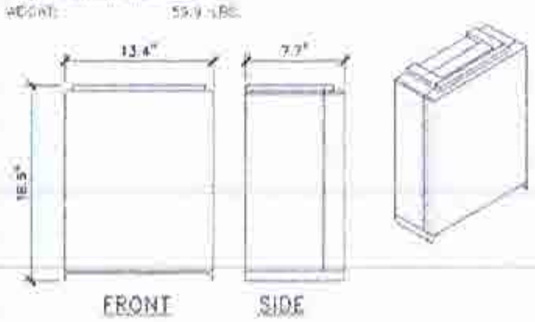

RRU-4478 B14 | 8

ERICSSON RRUS-8843 B2/B66A

DIMENSIONS (H×W×D): 13.2" × 10.9" × 14.9"
POWER CONSUMPTION: 1020 W
WEIGHT: 72 LBS

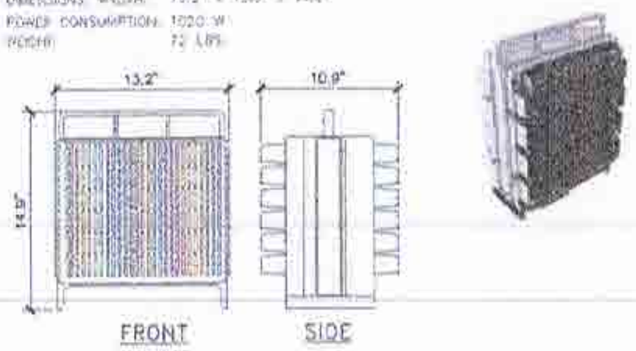

RRU-8843 B2/B66A | 9

ERICSSON RRUS-E2 B29

DIMENSIONS (H×W×D): 470×350×318 mm
(18.5"×13.78"×12.52")
POWER CONSUMPTION: 2 × 40W
TOTAL WEIGHT: 52.9 LBS

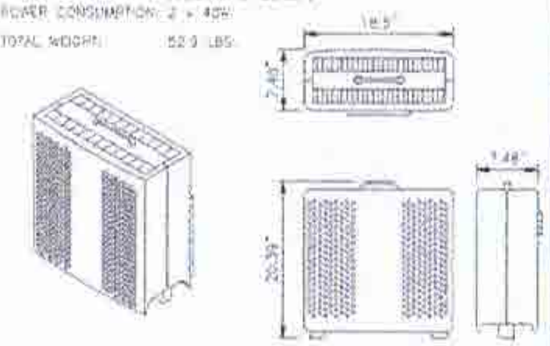

RRU-E2 B29 | 10

ERICSSON RRUS-4449 B5/B12

DIMENSIONS (H×W×D): 13.19" × 9.44" × 7.7"
POWER CONSUMPTION: 1440 W
WEIGHT: 71 LBS

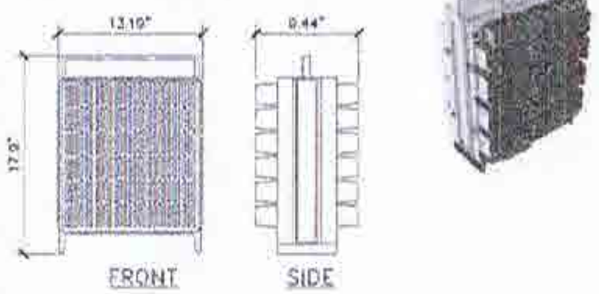

RRU-4449 B5/B12 | 11

ERICSSON BASEBAND - 5216

DIMENSIONS (W×D×H): 31×280×550 mm
(1.22"×11.02"×13.78")

BBU 5216 CONTAINS BUILT-IN CELL SITE ROUTER FUNCTIONALITY AND IS EQUIPPED WITH ETHERNET PORTS FOR TRANSPORT, WHICH CAN BE USED FOR REDUNDANCY OR FOR CONNECTING SITE EQUIPMENT.
- 1x 10/100/1000 (Gigabit Electrical Ethernet) RJ-45 Ethernet port
- 1x 10 and 1x 25 (Gigabit Electrical/Optical Ethernet (SFP+))

6- 2.5G (1/10/25 SFP/SFP+) CPRI PORTS

2- 10G+ PORTS

BBU 5216 SUPPORTS 2.5 OR 6 OR AND 10 CPRI CONNECTIONS.

BBU 5216 | 12

APPLICANT:

The NEW at&t
1452 EDINGER AVE., 3RD FLOOR
TUSTIN, CA 92780

ENGINEER

Eukon
an SFC Communications, Inc. Company
65 POST, SUITE 1000
IRVINE, CA 92618
TEL: (949) 553-8586
www.eukengroup.com

DRAWN BY:	AD
CHECKED BY:	AD

REVISIONS

REV	DATE	DESCRIPTION
0	11/19/20	100% CONSTRUCTION DRAWING
A	11/03/20	90% CONSTRUCTION DRAWING

LICENSEE

DATE SIGNED: 11-19-20

PROJECT INFORMATION

CSL04176
300 ALBIREO AVE.
LOMPOC, CA 93436

SHEET TITLE

EQUIPMENT SPECIFICATIONS

SHEET NUMBER

A-6

EMERSON NETSURE - 512 DC POWER SYSTEM

DC POWER SYSTEM FEATURES:

NOMINAL SYSTEM VOLTAGE:	-48 VDC or +24 VDC
CONTROL:	MICROPROCESSOR (ACU+)

RATED OUTPUT CAPACITY - MAXIMUM CONFIGURATION:

SYSTEM:	525 amps at -48 VDC plus redundancy 400 amps at +24 VDC plus redundancy
RECTIFIER:	2000 watts (41.7 A)
CONVERTER:	1200 watts (50 A), -48 VDC to +24 VDC
DISTRIBUTION PANEL (TOP):	Wired for (16) +24V and (13) -48 V outlet positions
(BOTTOM):	(10) -48 V outlet positions

ENVIRONMENTAL:

OPERATING TEMPERATURE:	-40 °F to 115 °F (-40 °C to 46 °C) continuous operation
HUMIDITY:	0% to 95% relative humidity, non-condensing

THERMAL SOLUTIONS:

POWER CHAMBER:	2500 watt door-mounted heat exchanger, 2 RU available space for surge protection
BATTERY CHAMBER:	Fan cooled, fresh air ventilation, holds up to (2) battery strings

EQUIPMENT:

GROUND BAR:	10 POSITIONS
TERMINAL BLOCK:	12-position Phoenix alarm block 32-position Phoenix alarm bunching block

MECHANICAL SPECIFICATIONS:

DIMENSIONS:	72"H x 32"W x 39"D
WEIGHT:	752 lbs.

SAFETY:

DC POWER SYSTEM:	UL 1801 Listed (US & Canada), NEBS Level 3
ENCLOSURE:	GR-487, UL 60950, and Seismic Zone 4 compliant

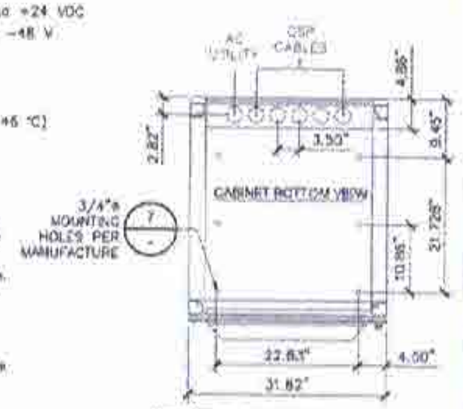

MOUNTING BOLT DOWN PATTERN

NOTE:
SEE DETAIL 9/A-7 FOR EQUIPMENT ANCHORAGE DETAIL.

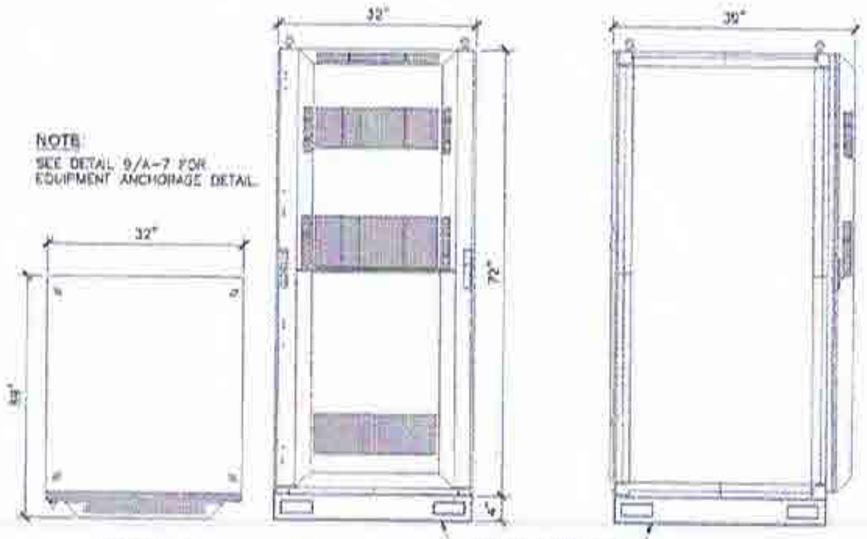

POWER PLANT | 1

PURCELL CABINET 660100-FLX21

DIMENSIONS, WxDxH:	25.27" W x 39.70" H x 30" D
FINISH:	ULTRA-LIGHT GRAY POLYESTER POWDER COAT FINISH
MOUNTING OPTIONS:	4" & 12" RISER PLINTHS, PAD, POLE, H-FRAME, WALL, UNISTRUT, STACKING
OPERATING TEMPERATURE	-40° TO 115° F

CABINET WEIGHT
THIS SPECIFICATIONS ARE FOR A TYPICAL SINGLE 660100 FLX21 CABINET

EMPTY CABINET:	140 lb
FULL CABINET:	250 lb

HEAT PAYLOAD:
1600 WATTS (W/55°C EQPTS)

NOTE:
SEE DETAIL 9/A-7 FOR EQUIPMENT ANCHORAGE DETAIL.

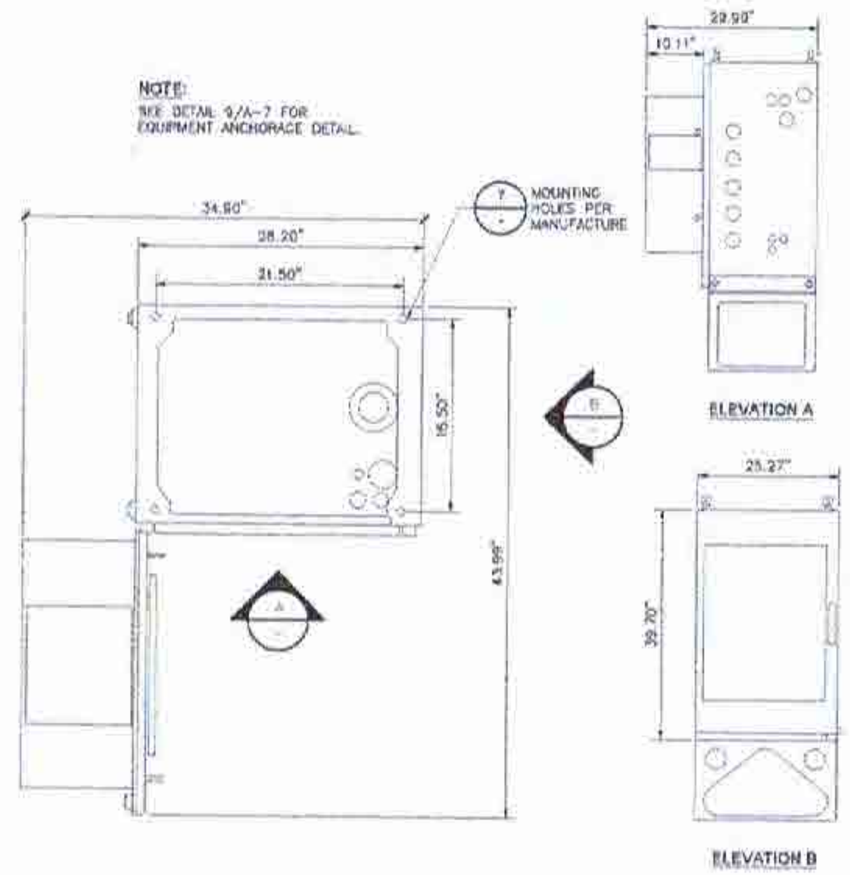

PURCELL CABINET | 2

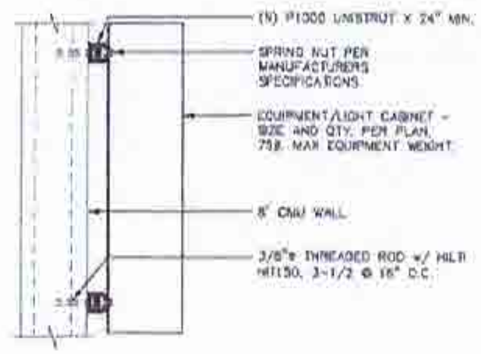

UNISTRUT TO WALL | 3

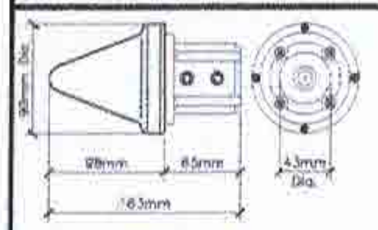

- GPS L1 REFERENCE ANTENNA
- N-TYPE RF CONNECTION (1575.42 MHZ)
- GAIN: 38 DBI TYPICAL @ ELEVATION ANGLE 90°)
- REQUIRES +5 VDC POWER (20 MA TYPICAL)
- CLIMATE: OUTDOOR (-40°C TO +85°C)
- WEIGHT
  - 157g ANTENNA WITHOUT MOUNTING BASE
  - 240g MOUNTING BASE (INCLUDED)
- FOR POLE MOUNTING USE 42mm OD TUBE

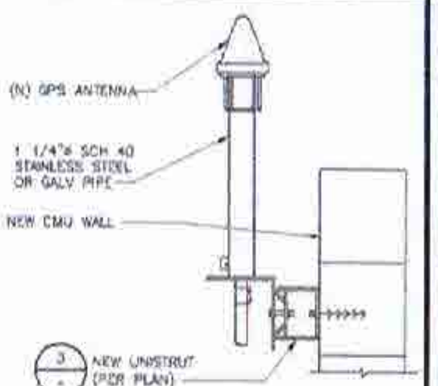

MOUNTING OPTION

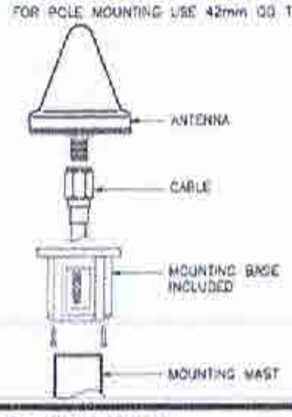

NOTES:

1. LOCATION OF ANTENNA MUST HAVE CLEAR VIEW OF SOUTHERN SKY AND CANNOT HAVE ANY BLOCKAGES EXCEEDING 25% OF THE SURFACE AREA OF A HEMISPHERE AROUND THE GPS ANTENNA.
2. ALL GPS ANTENNA LOCATIONS MUST BE ABLE TO RECEIVE CLEAR SIGNALS FROM A MINIMUM OF FOUR (4) SATELLITES. VERIFY WITH HANDHELD GPS BEFORE FINAL LOCATION OF GPS ANTENNA.
3. THE ANTENNA SHOULD NOT BE LOCATED WITHIN 3FT. OF ANY METALLIC WALLS OR OBJECTS IN ANY RADIAL DIRECTION OF THE DUAL BAND OMNI SECTION.

GPS ANTENNA | 4

ERICSSON BASEBAND R503 XMU
BASEBAND AUXILARY MULTIPLEXING UNIT

DIMENSIONS (HxWxD): (with wing shield and handle)	1.22" x 13.8" x [illegible]
WEIGHT:	5 lbs
HEAT DISSIPATION:	55W

PLATFORM FOR CPRI MULTIPLEXING AND DE-MULTIPLEXING
- 16x SFP+ PORTS
  - PLUGGABLE OPTICAL TRANSCEIVERS
  - DIRECT ATTACH CABLES
- -48V DC POWERING
- FANLESS

(ARGET RELEASE – L18)
- 2x (10Gbps -> or 2.5 Gbps)

BBU-XMU03 | 5

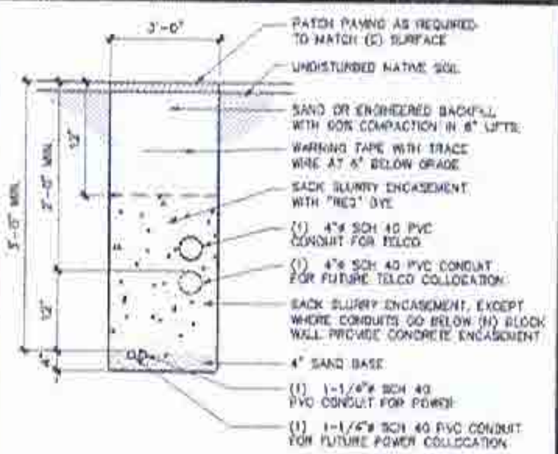

NOTE: PER SECTION 28.44.010.0.2 PROPOSED TRENCH SHALL BE DESIGNED W/ CAPACITY FOR ADDITIONAL CONDUITS IF SITE IS DETERMINED TO BE SUITABLE FOR COLLOCATION AS DESIGNED.

TRENCH | 6

NOTE
PROVIDE MIN. (4) ANCHORS PER CABINET, RACK, GENERATOR OR TANK.

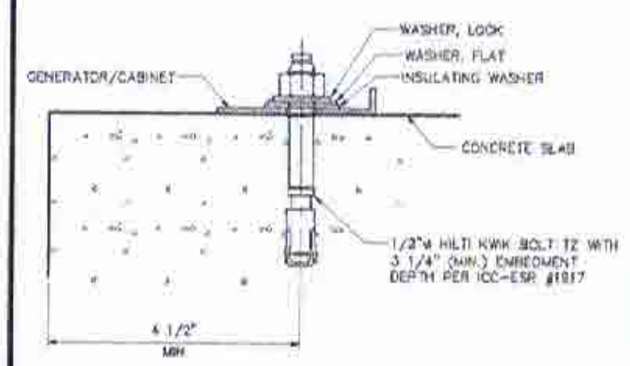

EQUIPMENT ANCHORAGE | 7

RAYCAP DC12-48-60-0-25E

CONNECTION TERMINAL (SUPPRESSION) METHOD:	COMPRESSION LUG
CONNECTION TERMINAL (SUPPRESSION) HARDWARE:	COPPER #14 TO #2 AWG [2.5 to 35 mm²] ALUMINUM #12 TO #2 AWG [4 to 35mm²]
FROM C CONTACT CONNECTION TERMINAL BLOCK) HARDWARE:	#22 TO #12 AWG [.034 to 4mm²]
OPERATING TEMPERATURE (C):	-40°C TO +100°C
STORAGE TEMPERATURE (C):	-70°C TO +80°C
ENCLOSURE TYPE (OUTDOOR):	NEMA 4 RATED
ENCLOSURE DIMENSION (LxWxH):	24"x24"x8" [609.6x609.6x203.2mm]
WEIGHT:	56.3lbs [25.54kg]

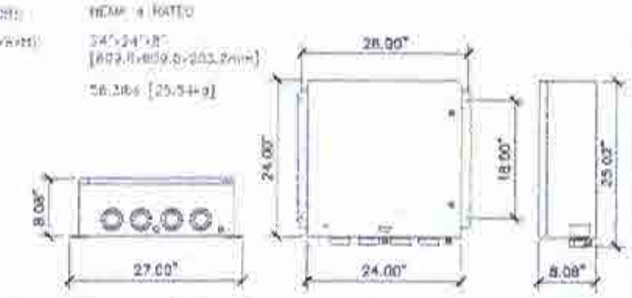

DC12 SURGE SUPPRESSOR | 8

APPLICANT

The NEW at&t
1452 EDINGER AVE., 3RD FLOOR
TUSTIN, CA 92780

ENGINEER:

Eukon
an SFC Communications, Inc. Company
65 POST, SUITE 1000
IRVINE, CA 92618
TEL: (949) 553-8566
www.eukongroup.com

DRAWN BY:	AC
CHECKED BY:	AC

REVISIONS

REV	DATE	DESCRIPTION
0	11/10/20	100% CONSTRUCTION DRAWING
A	11/03/20	90% CONSTRUCTION DRAWING

LICENSEE

76640

DATE SIGNED 11-10-20

PROJECT INFORMATION:

CSL04176
300 ALBIREO AVE.
LOMPOC, CA 93436

SHEET TITLE

EQUIPMENT SPECIFICATIONS

SHEET NUMBER

A-7

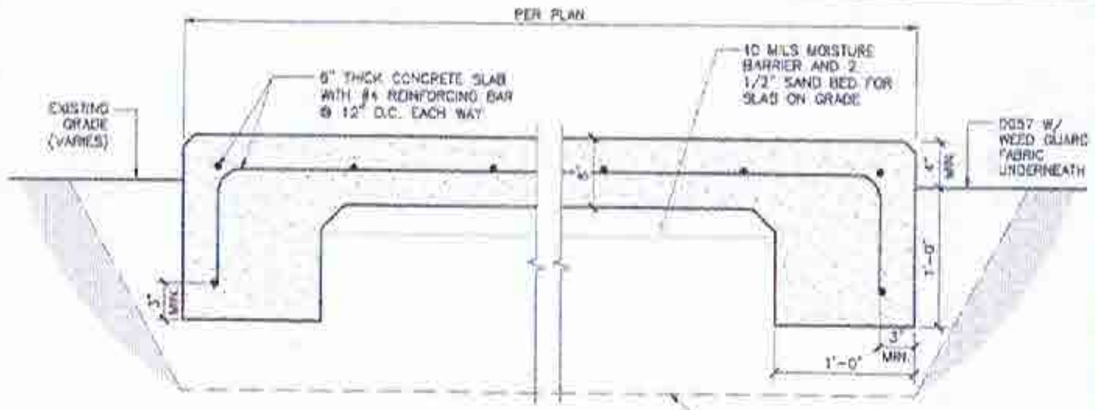

SECTION VIEW

CONCRETE AND REINFORCING STEEL NOTES:

1. ALL CONCRETE WORK SHALL BE IN ACCORDANCE WITH THE ACI 301, ACI 318, ACI 336, ASTM A184, ASTM A185 AND THE DESIGN AND CONSTRUCTION SPECIFICATION PER CAST-IN-PLACE CONCRETE.
2. ALL CONCRETE SHALL HAVE A MINIMUM COMPRESSIVE STRENGTH OF 2500 PSI AT 28 DAYS, UNLESS NOTED OTHERWISE.
3. REINFORCING STEEL SHALL CONFORM TO ASTM A615, GRADE 60, DEFORMED UNLESS NOTED OTHERWISE. WELDED WIRE FABRIC SHALL CONFORM TO ASTM A185 WELDED STEEL WIRE FABRIC UNLESS NOTED OTHERWISE. SPLICES SHALL BE CLASS "B" AND ALL HOOKS SHALL BE STANDARD, UNO.
4. THE FOLLOWING MINIMUM CONCRETE COVER SHALL BE PROVIDED FOR REINFORCING STEEL UNLESS SHOWN OTHERWISE ON DRAWINGS:

   CONCRETE CAST AGAINST EARTH.....3 IN.
   CONCRETE EXPOSED TO EARTH OR WEATHER:
   #6 AND LARGER .....2 IN.
   #5 AND SMALLER & WWF .....1 1/2 IN.
   CONCRETE NOT EXPOSED TO EARTH OR WEATHER OR NOT CAST AGAINST THE GROUND:
   SLAB AND WALL.....3/4 IN.
   BEAMS AND COLUMNS.....1 1/2 IN.
5. A CHAMFER 3/4" SHALL BE PROVIDED AT ALL EXPOSED EDGES OF CONCRETE, UNO, IN ACCORDANCE WITH ACI 301 SECTION 4.2.4.
6. GRAVEL SHALL BE NATURAL OR CRUSHED STONE WITH 100% PASSING 1 INCH SIEVE.
7. DIMENSIONS SHOWN ARE EXACT MINIMUM PAD SIZES REQUIRED FOR EQUIPMENT LAYOUTS – CONTRACTOR MAY ROUND UP TO THE NEAREST FOOT (OR HALF FOOT) IF LEASE AREA AND SPACE PERMIT.

CONCRETE PAD

1

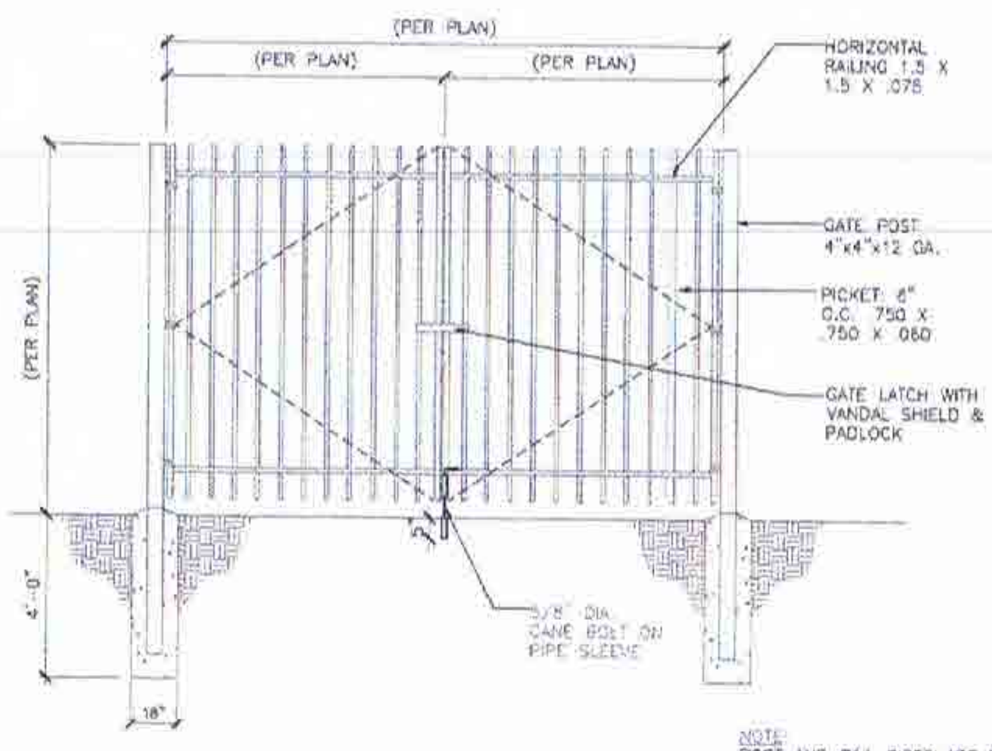

NOTE:
POST AND RAIL SIZES ARE FENCE INDUSTRY STANDARDS, SHALL BE GALV. AND PAINTED BLACK.

WROUGHT IRON ACCESS GATE

2

GENERAL

1. CONTRACTOR SHALL VISIT THE BUILDING SITE AND SHALL VERIFY ALL CONDITIONS AND DIMENSIONS PRIOR TO STARTING ANY WORK AND SHALL BE RESPONSIBLE FOR COORDINATION OF ALL WORK AND MATERIALS, INCLUDING THOSE FURNISHED BY THE SUB-CONTRACTORS. ENGINEER SHALL BE NOTIFIED IMMEDIATELY OF ANY DISCREPANCIES FOUND.
2. TYPICAL DETAILS SHALL APPLY WHERE NO SPECIAL DETAIL IS SHOWN.
3. ALL OMISSIONS OR CONFLICTS BETWEEN VARIOUS ELEMENTS OF THE WORKING DRAWINGS AND/OR SPECIFICATIONS SHALL BE BROUGHT TO THE ATTENTION OF THE ENGINEER BEFORE PROCEEDING WITH ANY WORK SO INVOLVED.
4. CONTRACTOR SHALL PROVIDE SAFE AND ADEQUATE TEMPORARY DIRECTION BRACING ON ALL ELEMENTS INCLUDING PROPOSED CONSTRUCTION & SOIL. PROVIDE FULL STRUCTURAL STABILITY. BRACING OR SHORING SHALL NOT BE REMOVED UNTIL THE ELEMENT SUPPORTED IS CAPABLE OF SUPPORTING ITS DESIGN LOAD.
5. ALL CONSTRUCTION SHALL BE IN ACCORDANCE WITH THE CURRENT UNIFORM BUILDING CODE AND ALL LOCAL CODE REQUIREMENTS.
6. IN NO CASE SHALL WORKING DIMENSIONS BE SCALED FROM PLANS, SECTIONS OR DETAILS ON THE DRAWINGS.
7. REFER TO ARCHITECTURAL, MECHANICAL AND ELECTRICAL DRAWINGS FOR MOULDS, ORNAMENTS, GROOVES, CUPS, GROUNDS, DROPPED SLABS, CURBS, ETC. NOT SHOWN ON DRAWINGS.
8. BACKFILL BEHIND RETAINING WALL SHALL NOT BE DONE PRIOR TO THE RETAINING WALL STEMS' GROUTING IS CURED.

REINFORCING STEEL

ALL REINFORCING STEEL SHALL BE NEW DEFORMED BARS CONFORMING TO ASTM A-615 GRADE 60.
LAP REINFORCING STEEL AT SPLICES TO THE FOLLOWING MINIMUM LENGTHS UNLESS NOTED OTHERWISE

#3 AND #4	2'-0"	#8	5'-3"
#5	2'-7"	#9	6'-8"
#6	3'-0"	#10	8'-6"
#7	4'-1"	#11	10'-5"

CONCRETE

1. ALL POURED-IN-PLACE CONCRETE SHALL HAVE AN ULTIMATE COMPRESSIVE STRENGTH OF 2500 PSI AT 28 DAYS, UNLESS OTHERWISE NOTED. CEMENT TO BE TYPE II FROM TESTED STOCK PER ASTM C-150.
2. CONCRETE FORM TOLERANCES SHALL BE WITHIN THE STANDARDS SET BY THE AMERICAN CONCRETE INSTITUTE.
3. ALL REINFORCING STEEL, ANCHOR BOLTS, DOWELS AND OTHER INSERTS SHALL BE SECURED IN POSITION AND INSPECTED BY THE LOCAL BUILDING DEPARTMENT INSPECTOR PRIOR TO THE POURING OF ANY CONCRETE.
4. NO PIPES OR DUCTS SHALL BE PLACED IN STRUCTURAL CONCRETE UNLESS SPECIFICALLY DETAILED. REFER TO ARCHITECTURAL, MECHANICAL, PLUMBING AND ELECTRICAL DRAWINGS FOR LOCATIONS.
5. FORM EXPOSED CORNERS OF COLUMNS, BEAMS, WALLS, ETC. WITH 3/4 INCH CHAMFERS UNLESS DETAILED OTHERWISE.
6. PROVIDE LIGHT BROOM FINISH ON ALL EXPOSED CONCRETE UNLESS NOTED OTHERWISE.

CONCRETE BLOCK MASONRY

1. MASONRY UNITS FOR HOLLOW UNIT MASONRY SHALL COMPLY WITH SECTION 2103 OF THE CBC. CONSTRUCTION SHALL COMPLY WITH CHAPTER 21 OF THE CBC AND LOCAL CODES.
   MASONRY SHALL BE LAID IN STRAIGHT UNIFORM COURSES IN RUNNING BOND. JOINTS SHALL BE TOOLED CONCAVE AND BE UNIFORM IN SIZE. TIE INTERSECTING WALLS BY OVERLAPPING UNITS IN ALTERNATE COURSES. ROUGHEN AND CLEAN CONCRETE BEARING SURFACES FOR THE PLACEMENT OF THE FIRST COURSE. VERTICAL HEAD JOINTS SHALL BE FILLED SOLID AND SHOVED TIGHTLY TO PROVIDE BOND TO BOTH BLOCKS.
2. MORTAR SHALL BE FRESHLY PREPARED AND UNIFORMLY MIXED OF 1 PART PORTLAND CEMENT, 1/2 MAXIMUM TO 1/4 MINIMUM PARTS LIME PUTTY OR HYDRATED LIME, AND 3 PARTS SAND.
3. GROUT SHALL BE FLUID CONSISTENCY AND MIXED IN RATIO OF 1 PART CEMENT AND 3 PARTS SAND FOR GROUT SPACES LESS THAN 4" IN ANY DIRECTION. FOR SPACES GREATER THAN 4" THE RATIO IS TO BE 1 PART CEMENT, 2 PARTS SAND AND 2 PARTS PEA GRAVEL. AGGREGATE AND SAND SHALL CONFORM TO ASTM C-144. SOLID GROUT ALL CELLS.
4. USE CARE TO PREVENT MORTAR AND GROUT SPILLAGE ON THE FACE OF THE MASONRY. CLEAN SUCH SPILLAGE IMMEDIATELY. REPAIR ANY DAMAGES OR INTERSTICES BETWEEN BLOCK AND REMOVE STAINS AT THE COMPLETION OF WORK.
5. SPLICE ALL BARS IN MASONRY WITH A MINIMUM OF 48 BAR DIAMETER LAPS (2'-0" MINIMUM).
6. ALL ISOLATED BOLTS EMBEDDED IN MASONRY SHALL BE GROUTED SOLIDLY IN PLACE WITH NOT LESS THAN 2" OF GROUT SURROUNDING THE BOLT.
7. SEAL RETAINING FACE OF WALL AND FOOTING WITH 2 COATS OF HENRY'S 502 ASPHALTIC MASTIC.

CONSTRUCTION MATERIALS SPECIFICATIONS

1. ALL CONCRETE AND GROUT SHALL BE MIN. f'c = 2500 PSI.
2. CMU BLOCK SHALL BE MIN. f'm = 1500 PSI. 8"x8"x16"
3. ALL STEEL SHALL BE GRADE 60. fy = 60,000 PSI. fu = 24,000 PSI

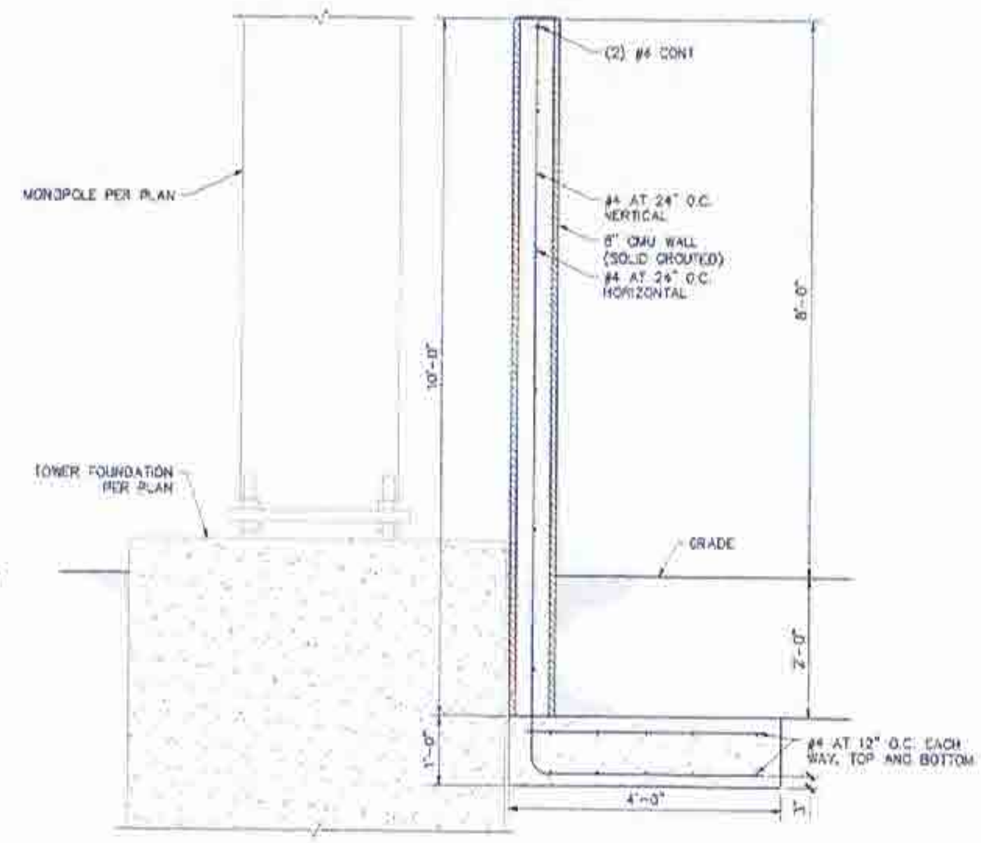

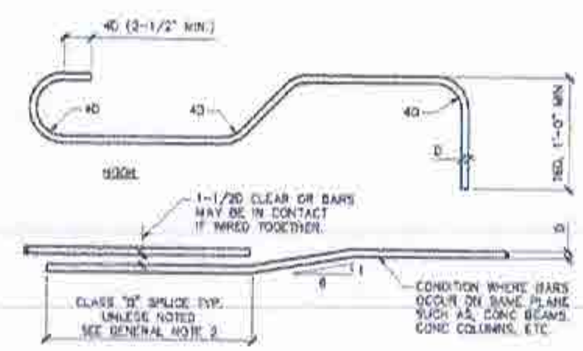

REINF. BENDING DETAIL

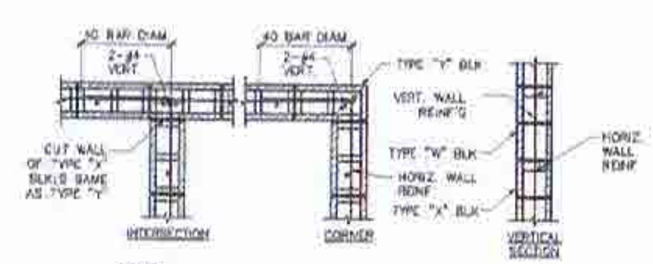

NOTES
1. GROUT ALL CELLS.
2. VERTICAL REINFORCING TO BE AT ℄ OF WALL UNLESS NOTED OTHERWISE.
3. ALSO SEE GENERAL MASONRY NOTES.

CONC. BLOCK DETAIL

CMU WALL

3

APPLICANT

The NEW at&t
1452 EDINGER AVE., 3RD FLOOR
TUSTIN, CA 92780

ENGINEER

Eukon
an SFC Communications, Inc. Company
85 POST, SUITE 1000
IRVINE, CA 92618
TEL: (949) 553-8566
www.eukongroup.com

DRAWN BY:	AC
CHECKED BY:	AG

REVISIONS

REV.	DATE	DESCRIPTION
C	11/19/20	100% CONSTRUCTION DRAWING
A	11/03/20	90% CONSTRUCTION DRAWING

LICENSEE

DATE SIGNED: 11-19-20

PROJECT INFORMATION

CSL04176
300 ALBIREO AVE.
LOMPOC, CA 93436

SHEET TITLE

CONSTRUCTION SPECIFICATIONS

SHEET NUMBER

A-8

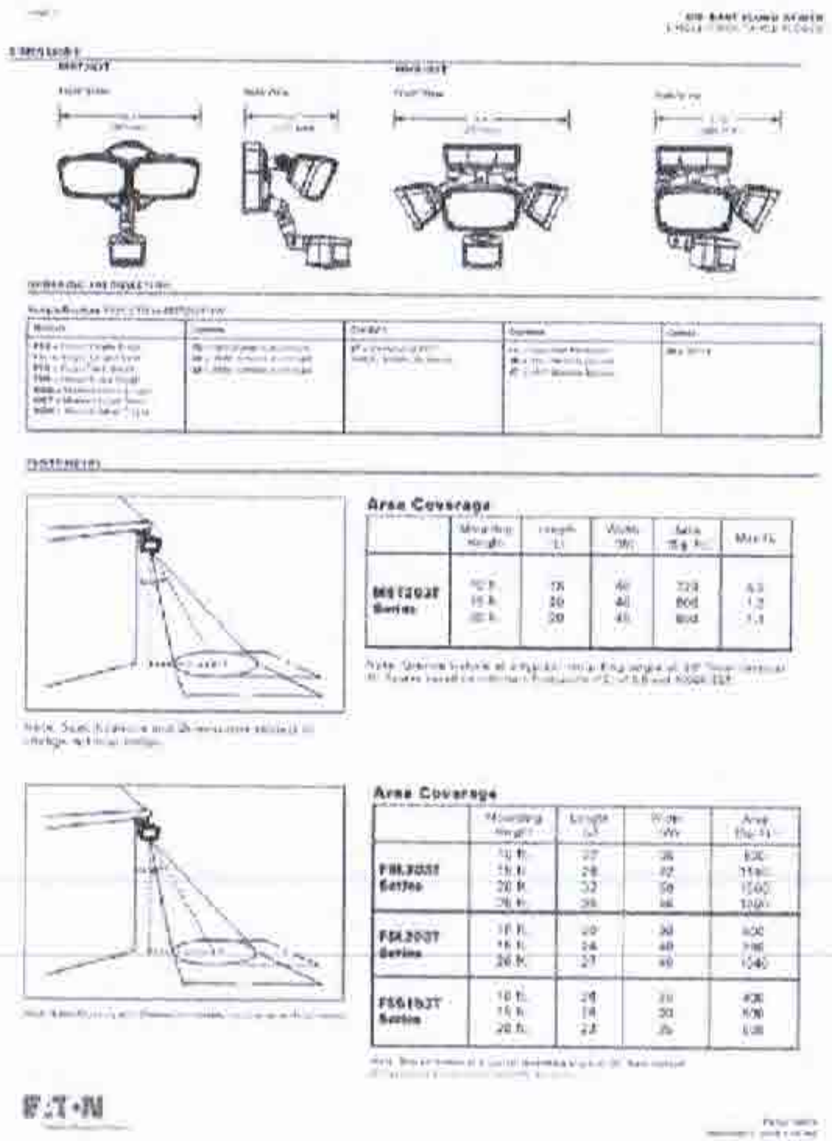

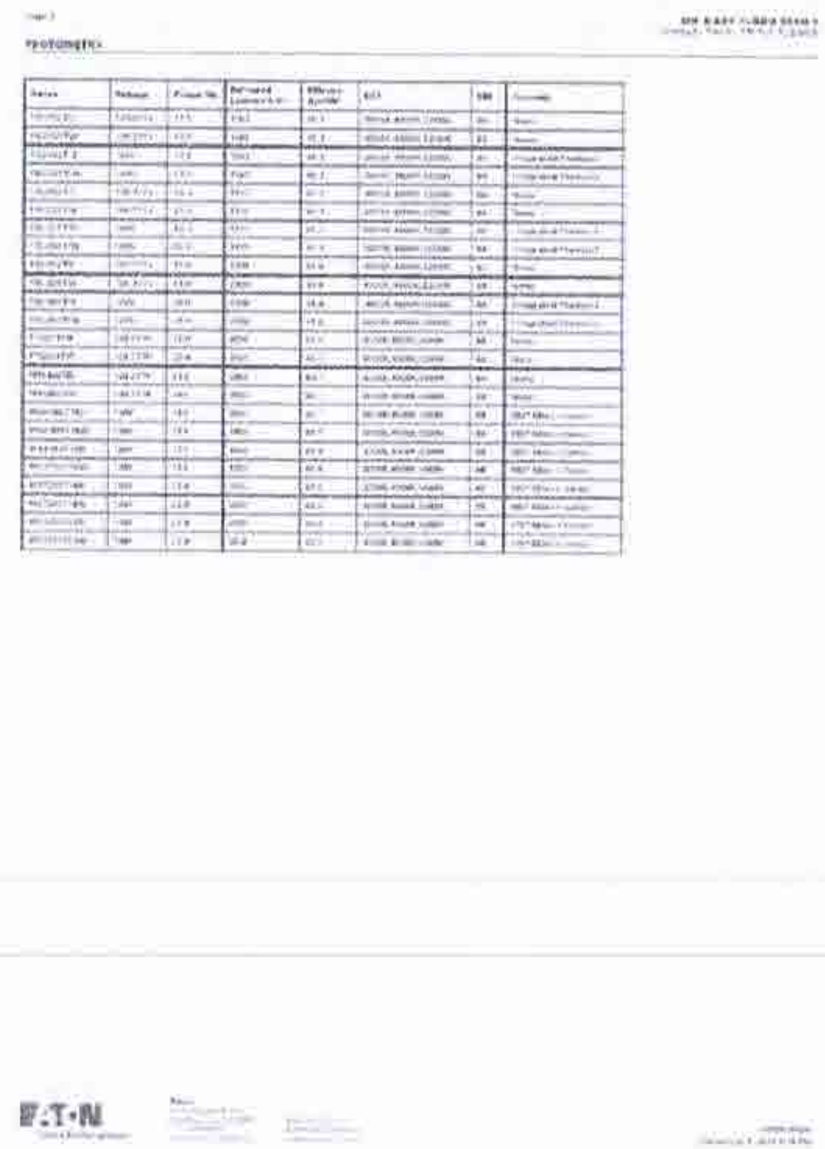

LIGHT SPECIFICATION

APPLICANT:

The NEW at&t

1452 EDINGER AVE., 3RD FLOOR
TUSTIN, CA 92780

ENGINEER:

Eukon
an SFC Communications, Inc. Company
65 POST, SUITE 1000
IRVINE, CA 92618
TEL: (949) 553-8568
www.eukongroup.com

DRAWN BY:	AG
CHECKED BY:	AG

REVISIONS

REV.	DATE	DESCRIPTION
C	11/10/20	90% CONSTRUCTION DRAWING
A	11/03/20	90% CONSTRUCTION DRAWING

LICENSEE:

DATE SIGNED: 11-19-20

PROJECT INFORMATION:

CSLC4176
300 ALBIREO AVE.
LOMPOC, CA 93436

SHEET TITLE:

EQUIPMENT SPECIFICATIONS

SHEET NUMBER:

A-9

POLAR POWER INC.

20 KW DIESEL DC GENERATOR
Part Number: 8220-100-D-20-03-V-125
NEQ.45934

All APUs include:
- Powder coated aluminum enclosure
- Electric radiator fans
- 1-Year Warranty
- OPV (Over-fill Prevention Valve)

Options available:
- 8-alarm relay board
- Oil refueling kit

Standards:
- UL STD 2200
- CSA C22.2 No. 100

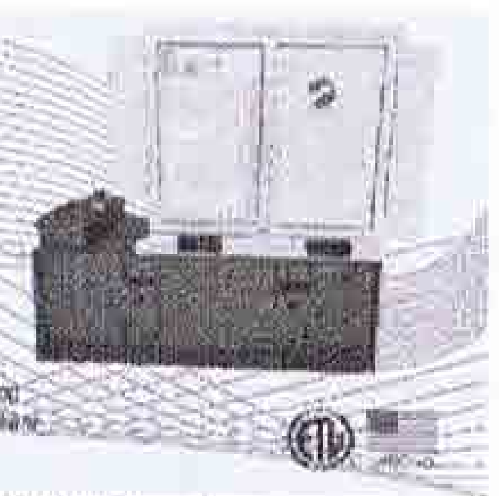

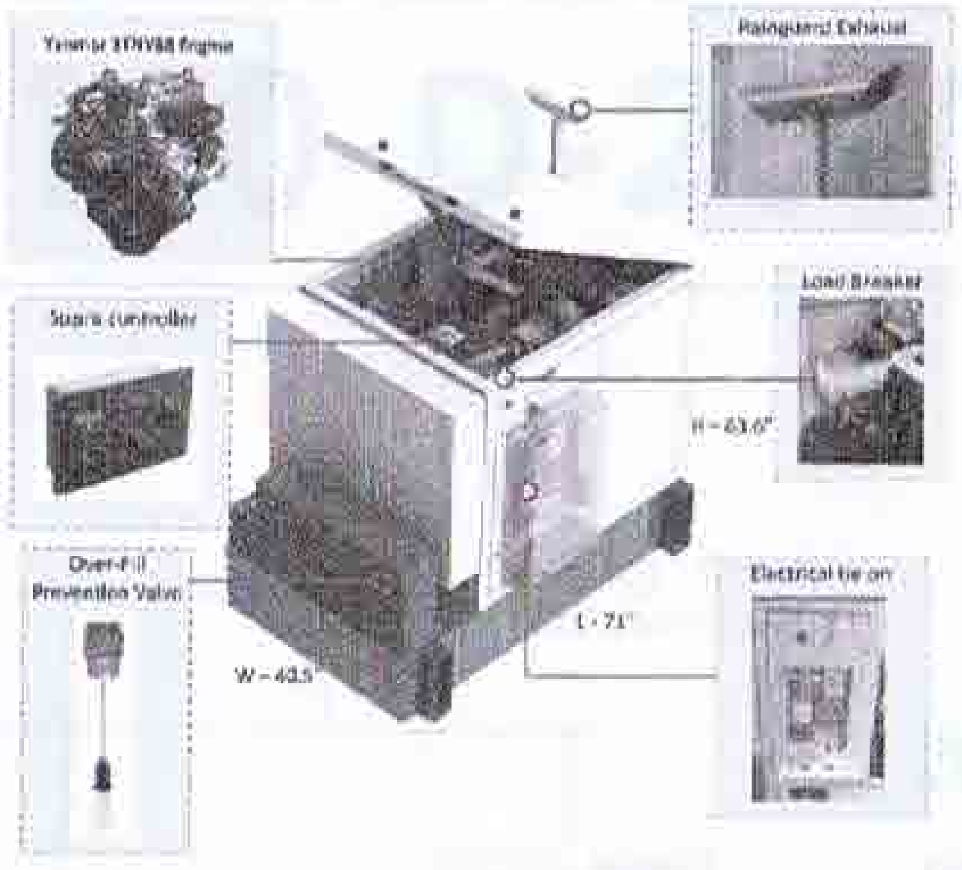

SPECIFICATIONS PN: 8220-100-D-20-03-V-125

Engine

Engine Model	Yanmar 3TNV88-BDSA
Cylinders	3 in-line
Displacement (L)	1.642
Bore (in./mm)	3.4/88
Stroke (in./mm)	3.5/90
Intake Air System	Naturally Aspirated
Engine HP	34
Emissions	U.S. EPA Tier 4 Interim
Emissions Compliance	EPA and CARB Certified
Variable RPM	1200 to 3900

Engine lubrication system

Oil Filter Type	Full flow spin-on canister
Oil Capacity (L)	6.7
Oil Pressure Switch (Standard)	Yes
Oil Pressure Transducer	Optional

Fuel Tank

UL Rated Capacity (gal/L)	125/473
Run Time (hrs) Calculated, dependent on amount fuel	48 to 220
Tank Alarms + Visual Gage	Yes
OPV (over-fill prevention valve)	Yes
Catch Basin (gal/L)	3/18
Listings	UL 142 (double wall)

Fuel Tank Reserve Time (Calculated)

Load (kW)	Reserve Time (hrs.)
4	147
6	125
8	103
10	144
16	131
20	48

Engine cooling system

Type	Pressurized Aluminum Radiator
Water Pump	Belt-driven, Pre-fused, Self-sealing
Fan Type	Electric Fans
Airflow CFM	1300
Fan Mode	Pusher
Temperature Sensor	Yes

Environmental

Operating Temperature (°C/°F)	-40 to 51.7 / -40 to 125
Operating Humidity %	100
Cold Start Aids	Optional

Power adjustment for conditions

Temperature Derating	1% derate for every 5.6°C (10°F) above 25°C (77°F)
Altitude Derating	3% derate for every 305 m (1000 ft) above 91 m (300 ft)

Diesel Fuel system

Type	Diesel
Fuel Pump Type	Electrical
Injector Type	Mechanical
Fuel Filtering	Paper Element

Diesel Fuel Consumption (calculated)

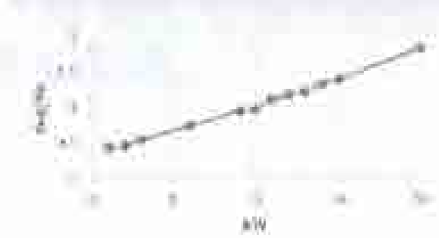

Engine cooling

System coolant capacity (gal/L)	1.2/4.5

Alternator

Alternator Model	8220
Type	Permanent Magnet, NdFeB
Weight (lb/kg)	86.5/39
Regulation Type	Variable engine speed
Stator	3 phase/14 poles
Overcurrent Protection (A)	30 kW – 150
Gen DC Output Disconnect Means	Pull fuse block w/ Circuit breaker
Voltage Range (VDC)	44 to 56
Alternator Exhaust Flow (cfm/cmm)	170 to 300 / 2.60 to 8.5
MTBF (hr)	100,000+

Enclosure

Model	EE-20-3100
Type	Weather Protective
Materials	Powder coated aluminum
Door Hardware	Two lockable doors and removable side panels
Mounting	Secure Mounting Tabs
Dims	L 71" x W 40.5" x H 63.6" (Height 34.5" Including Exhaust)

Weight

Dry Weight (lb/kg) Includes oil and coolant. No diesel	1372/622

Starter Supercapacitor

Model	29-16.000
Storage Rating (Ah)	300
Voltage (VDC)	41.4
Weight (lb/kg)	12/5.5
Operating Temperature (°C/°F)	-40 to 65 / -40 to 149
Service Life (year)	10 to 15

Charger

Model	08-1640 [illegible]
Input Voltage (VDC)	37 to 74
Output Voltage (VDC)	34 to 44
Recharge time from 0 VDC (min)	10
Recharge time from [illegible] VDC (min)	2
Weight (lb/kg)	1.7

Standards

Certification	Intertek 4005579
UL Listing	UL STD 2200
Standards	CSA STD C22.2 No. 100

Acoustic Noise Level (dBM)
(see sound test sheets)

Idle	51.6
3.75 kW	66.4
5.0 kW	66.7
6.25 kW	67.2
20 kW	67.1

Controller features

Controller Type .... Supra Model 210
4-Line Plain Text OLED Display .... Simple user interface for ease of operation
Engine Run Hours Indication .... Standard
Programmable Start Delay .... Standard
Run/Alarm/Maintenance Logs .... Standard
Engine Start Sequence .... Cycle cranking: 5 sec on, 30sec rest (3 attempts maximum)
Starter Supercapacitor Charger .... Standard
Automatic Voltage Regulation with Over and Under Voltage Protection .... Standard
Automatic Low Oil Pressure/High Oil Temperature Shutdown .... Standard
Overcrank/Overspeed .... Standard
Automatic High Engine Temperature Shutdown .... Standard
Field Upgradeable Firmware .... Standard
Glow Plug Delay .... Adjustable
Engine Start Delay .... Adjustable, Set at 30 sec
Return to Utility Delay .... Adjustable, Set at 30 sec
Engine Cool-Down .... Adjustable, Set at 30 sec
Exercise Mode .... Programmable

Monitoring

Alarm monitoring and remote control through Ethernet

Contact closure alarm board

Shutdown Alarm .... Standard
Warning Alarm .... Standard
Engine Run .... Standard
E-Stop Depressed .... Standard

OPV

Min / Max Flow Pressure	3 PSI / 100 PSI
Connection	2" Cam Lock
Fluid Compatibility	Diesel, Biodiesel
Standards	ULC-S661:10 / RFPA SR 10A

SOUND TEST RESULTS @ 20kW

POLAR POWER

Sound Pressure Levels in (dBA)

Position	Overall Level	Frequency Spectrum Levels
[illegible]	[illegible]	[illegible]

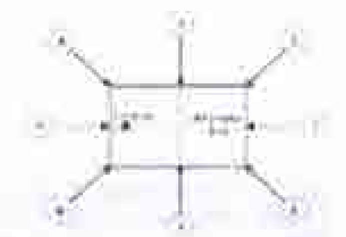

APPLICANT:
The NEW at&t 1452 EDINGER AVE., 3RD FLOOR TUSTIN, CA 92780

ENGINEER:
Eukon an SPG Communications, Inc. Company 65 POST, SUITE 1000 IRVINE, CA 92618 TEL: (949) 553-8566 www.eukongroup.com

DRAWN BY: AG
CHECKED BY: AG

REVISIONS:

REV	DATE	DESCRIPTION
C	11/10/20	100% CONSTRUCTION DRAWING
A	11/03/20	90% CONSTRUCTION DRAWING

LICENSEE
DATE SIGNED: 11-19-20

PROJECT INFORMATION:
CSL04176
300 ALBIREO AVE.
LOMPOC, CA 93436

SHEET TITLE: GENERATOR SPECIFICATIONS

SHEET NUMBER: GEN-1

GENERATOR SPECIFICATION

8220-100-D-20-03-V-125

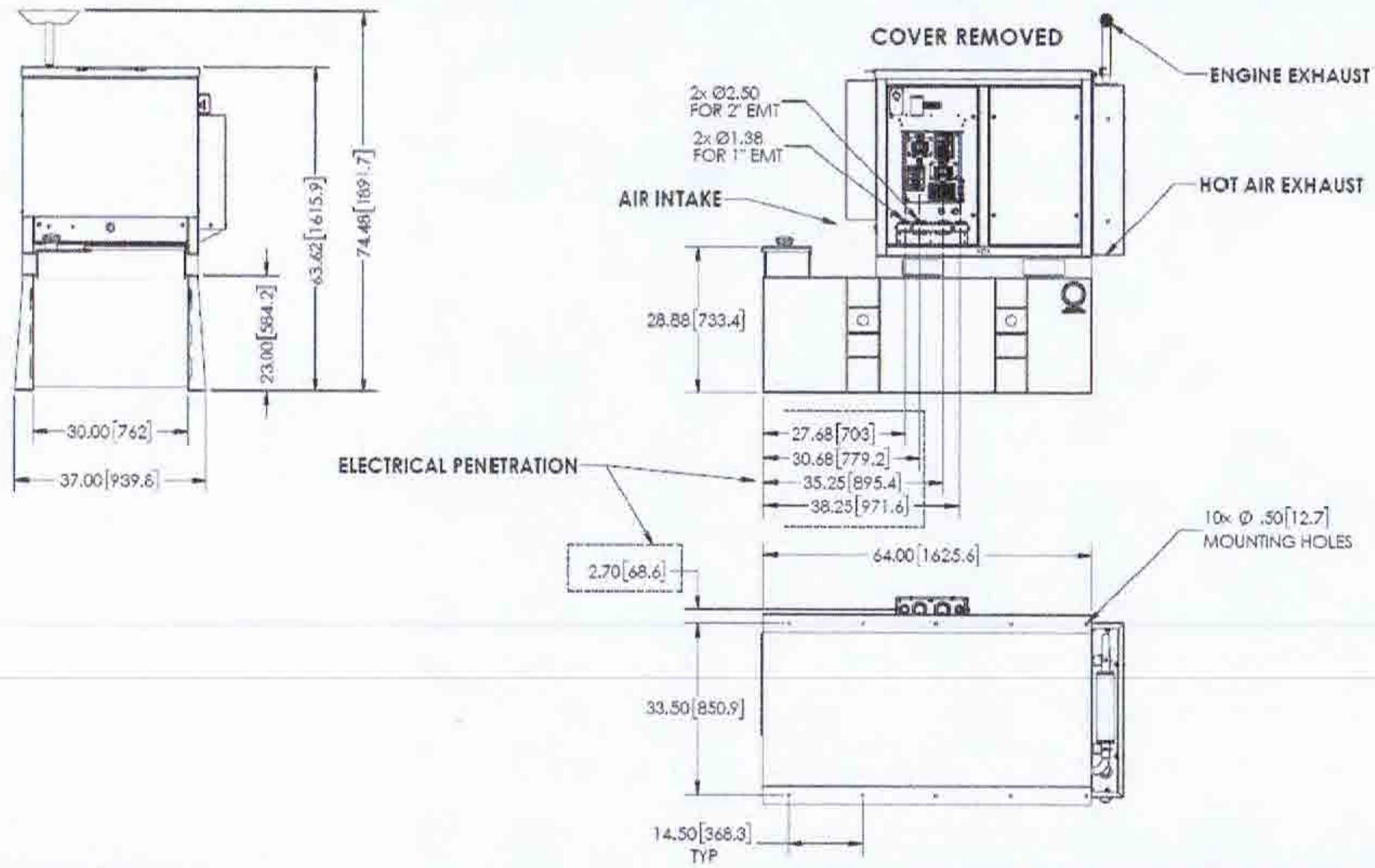

OVERALL DIMENSIONS

REV	DESCRIPTION	BY	DATE
A	INITIAL RELEASE	--	06/05/20

COMMENTS:
125 GALLON TANK (UL142)

PROPRIETARY AND CONFIDENTIAL
THE INFORMATION CONTAINED IN THIS DRAWING IS THE SOLE PROPERTY OF POLAR POWER INC. ANY REPRODUCTION IN PART OR AS A WHOLE WITHOUT THE WRITTEN PERMISSION OF POLAR POWER INC. IS PROHIBITED.

NEXT ASSY | USED ON
APPLICATION

UNLESS OTHERWISE SPECIFIED:
DIMENSIONS ARE IN INCHES
TOLERANCES ARE:
FRACTIONS ±1/64 | DECIMALS ±.XX ±.XXX | ANGLES ±1/2°
MATERIAL
FINISH
DO NOT SCALE DRAWING

CAD GENERATED DRAWING
DO NOT MANUALLY UPDATE
APPROVALS | DATE
DRAWN | CHECKED
ENG APPR.
MFG APPR.
Q.A.
06/05/20

POLAR POWER INC.
249 EAST GARDENA BLVD. GARDENA, CA 90248

TITLE: Horizontal Enclosure w/ 125 Gal Double-Walled Tank

SIZE	DWG. NO.	REV
B	--	A-1

SCALE: 1:16 WEIGHT: SHEET 4 OF 4

APPLICANT:
The NEW at&t
1452 EDINGER AVE., 3RD FLOOR
TUSTIN, CA 92780

ENGINEER:
Eukon
an EFC Communications, Inc. Company
65 POST, SUITE 1000
IRVINE, CA 92618
TEL: (949) 553-8566
www.eukengroup.com

DRAWN BY: AG
CHECKED BY: AG

REVISIONS

REV.	DATE	DESCRIPTION
C	11/10/20	100% CONSTRUCTION DRAWING
A	11/03/20	90% CONSTRUCTION DRAWING

LICENSED:
DATE SIGNED: 11-19-20

PROJECT INFORMATION:
CSL04176
300 ALBIREO AVE.
LOMPOC, CA 93436

SHEET TITLE:
GENERATOR SPECIFICATIONS

SHEET NUMBER:
GEN-3

SCALE NOTE:
IF DIMENSIONS SHOWN ON PLAN DO NOT SCALE CORRECTLY, CHECK FOR REDUCTION OR ENLARGEMENT FROM ORIGINAL PLANS.

NOTES:
1. POWER DESIGN AND RUN IS PRELIMINARY, PENDING FINAL DESIGN FROM UTILITY PROVIDERS.
2. UNDERGROUND WATER LINE NOT ABLE TO BE LOCATED IN FIELD SURVEY USING GROUND PENETRATING RADAR, VERIFY IN FIELD BEFORE START OF TRENCHING.

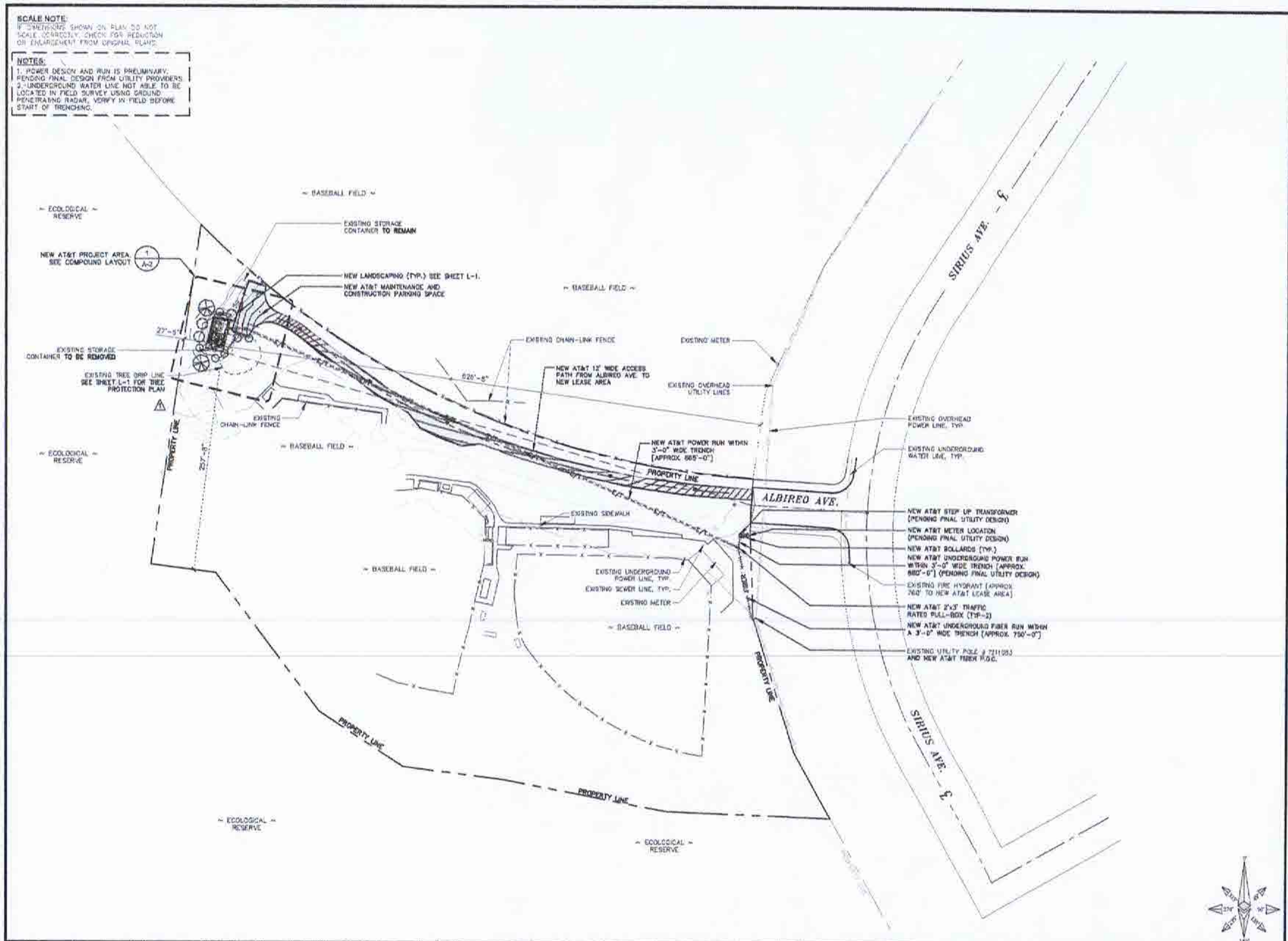

ELECTRICAL SITE PLAN

1

APPLICANT:

The NEW at&t
1452 EDINGER AVE., 3RD FLOOR
TUSTIN, CA 92780

ENGINEER:

Eukon
an SFC Communications, Inc. Company
65 POST, SUITE 1000
IRVINE, CA 92618
TEL: (949) 553-8566
www.eukongroup.com

DRAWN BY:	AG
CHECKED BY:	AG

REVISIONS

REV.	DATE	DESCRIPTION
0	11/10/20	100% CONSTRUCTION DRAWING
A	11/03/20	95% CONSTRUCTION DRAWING

LICENSEE:

DATE SIGNED: 11-19-20

PROJECT INFORMATION:

CSLC4176
300 ALBIREO AVE.
LOMPOC, CA 93436

SHEET TITLE:

ELECTRICAL SITE PLAN

SHEET NUMBER:

E-1

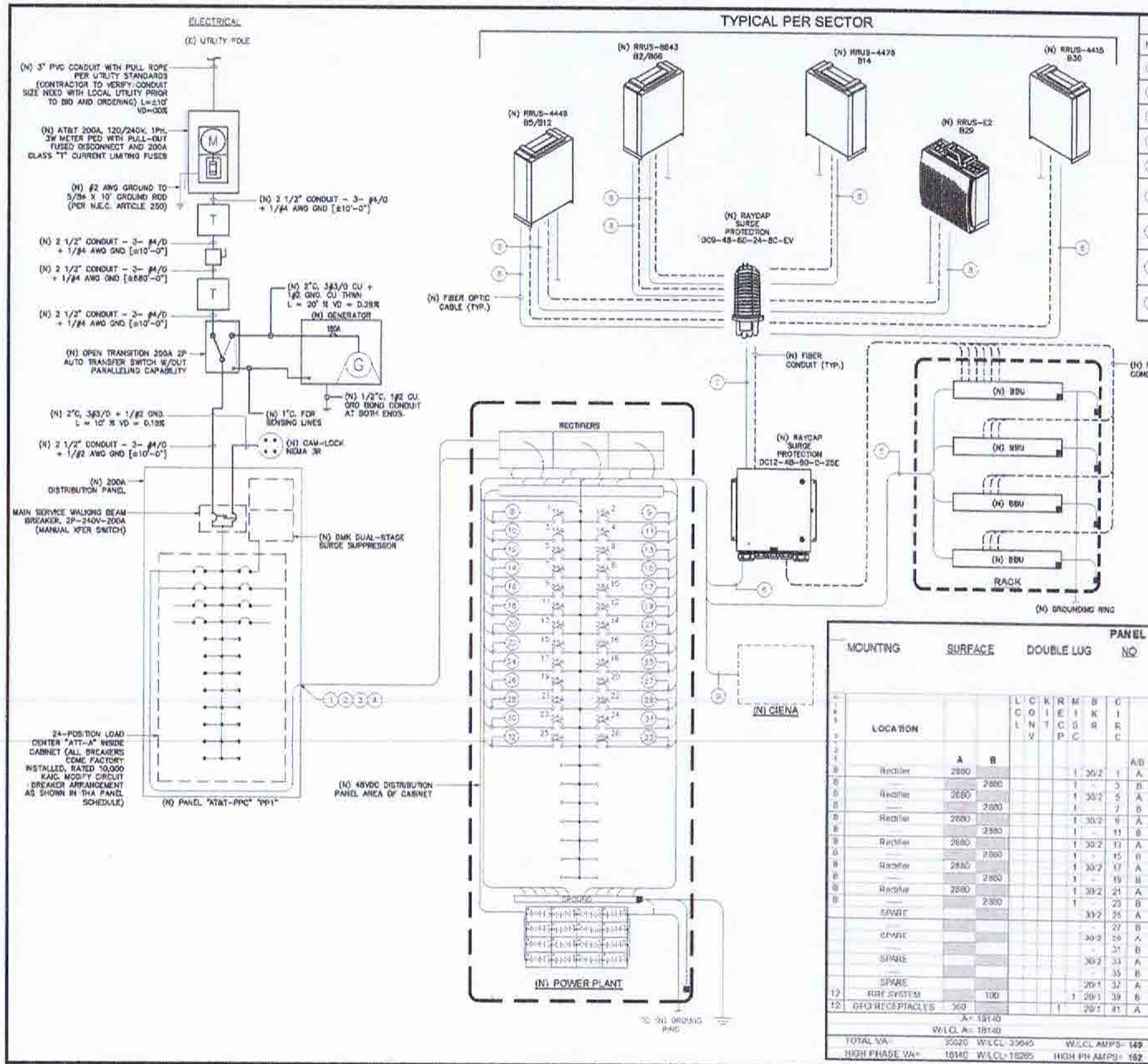

CIRCUIT SCHEDULE

NO.	FROM	TO	WIRE SIZE	BREAKER
1	AC SERVICE ENTRANCE CABINET	ENCLOSURE GFCI RECEPTACLE	PER PLAN	120/240V AC-20A
2	AC SERVICE ENTRANCE CABINET	48VDC RECTIFIERS 1, 2, 3	PER PLAN	120/240V AC-50A
3	AC SERVICE ENTRANCE CABINET	48VDC RECTIFIERS 4, 5	PER PLAN	30A
4	AC SERVICE ENTRANCE CABINET	BATTERY HEATER MATS	N/A	20A
5	48VDC, POWER PLANT	(N) BBU (TYP.-4)	(8) #10 RHH DC CABLE	-48V DC 10A
6	48VDC, POWER PLANT	(N) RAYCAP SURGE SUPPRESSOR DC12-48-60-0-25C (TYP.-2)	(4) #10 RHH DC CABLE	N/A
7	(N) RAYCAP SURGE SUPPRESSOR DC12-48-60-0-25C (TYP.-2)	(N) RAYCAP SURGE SUPPRESSOR DC9-48-60-24-8C-EV (TYP.-3)	(8) #10 RHH DC CABLE	N/A
8	(N) RAYCAP SURGE SUPPRESSOR DC9-48-60-24-8C-EV (TYP.-3)	(N) REMOTE RADIO UNIT (TYP.-15)	(48) #8 RHH DC CABLE	-48V DC 25A
9	48VDC, POWER PLANT	(N) CIENA	#10 RHH DC CABLE	-48V DC 25A

PANEL PPC

MOUNTING: SURFACE | DOUBLE LUG: NO | VOLTS: 120|240 | PHASE: 1 | WIRE: 3 | MAIN: 200A/2P | BUS: 200A | A.I.C: 42K SERIES W/ MAIN

	LOCATION	A	B	LCL	CONV	KIT	RECP	MISC	BKR	CIRC		CIRC	BKR	MISC	RECP	KIT	CONV	LCL	A	B	LOCATION	
											A/B											
8	Rectifier	2880					1	30/2	1	A	2	20/2	1					1800		HVAC	12
8			2880				1	-	3	B	4	-	1						1800	—	12
8	Rectifier	2880					1	30/2	5	A	6	20/2								SPARE	
8	—		2880				1		7	B	8									—	
8	Rectifier	2880					1	30/2	9	A	10	20/1	1					360		RECEPTACLES	12
8			2880				1		11	B	12	20/1				1			500	INT & EMER LTG	12
8	Rectifier	2880					1	30/2	13	A	14	20/1				1		500		EXTERIOR LTG	12
8			2880				1	-	15	B	16	20/1								SPARE	
8	Rectifier	2880					1	30/2	17	A	18	20/1								SPARE	
8	—		2880				1	-	19	B	20	20/1								SPARE	
8	Rectifier	2880					1	30/2	21	A	22	20/1								SPARE	
8	—		2880				1	-	23	B	24	20/1								SPARE	
	SPARE							30/2	25	A	26									SPACE	
								-	27	B	28									SPACE	
	SPARE							30/2	29	A	30									SPACE	
	—							-	31	B	32									SPACE	
	SPARE							30/2	33	A	34									SPACE	
	—							-	35	B	36									SPACE	
	SPARE							20/1	37	A	38									SPACE	
12	FIRE SYSTEM		100				1	20/1	39	B	40									SPACE	
12	GFCI RECEPTACLES	360					1	20/1	41	A	42									SPACE	

A= 18140 W/LCL A= 18140 B= 17360 W/LCL B= 17505

TOTAL VA= 35500 W/LCL 35645 W/LCL AMPS= 149 TOTAL LCL= 500 X 25 = 125

HIGH PHASE VA= 18140 W/LCL= 18285 HIGH PH AMPS= 152 HIGH PHASE LCL= 500 X 25 = 125

SINGLE-LINE/AC PANEL SCHEDULE

1

APPLICANT

The NEW at&t

1452 EDINGER AVE., 3RD FLOOR
TUSTIN, CA 92780

ENGINEER

Eukon
an SFC Communications, Inc. Company
65 POST, SUITE 1000
IRVINE, CA 92618
TEL: (949) 553-8566
www.eukongroup.com

DRAWN BY:	AC
CHECKED BY:	AC

REVISIONS

REV	DATE	DESCRIPTION
C	11/10/20	100% CONSTRUCTION DRAWING
A	11/03/20	90% CONSTRUCTION DRAWING

LICENSEE

DATE SIGNED 11-19-20

PROJECT INFORMATION

CSL04176
300 ALBIREO AVE.
LOMPOC, CA 93436

SHEET TITLE

SINGLE-LINE DIAGRAM/AC PANEL SCHEDULE

SHEET NUMBER

E-2

GENERAL REQUIREMENTS

A. ALL WORK AND MATERIALS SHALL BE IN ACCORDANCE WITH THE LATEST RULES AND REGULATIONS OF THE NATIONAL ELECTRIC CODE AND ALL STATE AND LOCAL CODES. NOTHING IN THESE PLANS OR SPECIFICATIONS SHALL BE CONSTRUED AS TO PERMIT WORK NOT CONFORMING TO THE MOST STRINGENT OF THESE CODES. SHOULD CHANGES BE NECESSARY IN THE DRAWINGS OR SPECIFICATIONS TO MAKE THE WORK COMPLY WITH THESE REQUIREMENTS, THE CONTRACTOR SHALL IMMEDIATELY NOTIFY THE ARCHITECT IN WRITING AND CEASE WORK ON PARTS OF THE CONTRACT WHICH ARE AFFECTED.

B. THE CONTRACTOR SHALL MAKE A SITE VISIT PRIOR TO BIDDING AND CONSTRUCTION TO VERIFY ALL EXISTING CONDITIONS AND SHALL NOTIFY THE ARCHITECT IMMEDIATELY UPON DISCOVERY OF ANY DISCREPANCIES. THE CONTRACTOR ASSUMES ALL LIABILITY FOR FAILURE TO COMPLY WITH THIS PROVISION.

C. THE EXTENT OF THE WORK IS INDICATED BY THE DRAWINGS, SCHEDULES, AND SPECIFICATIONS AND IS SUBJECT TO THE TERMS AND CONDITIONS OF THE CONTRACT. THE WORK SHALL CONSIST OF FURNISHING ALL LABOR, EQUIPMENT, MATERIALS AND SUPPLIES NECESSARY FOR A COMPLETE AND OPERATIONAL ELECTRICAL SYSTEM. THE WORK SHALL ALSO INCLUDE THE COMPLETION OF ALL ELECTRICAL WORK NOT MENTIONED OR SHOWN WHICH ARE NECESSARY FOR SUCCESSFUL OPERATION OF ALL SYSTEMS.

D. THE CONTRACTOR SHALL PREPARE A BID FOR A COMPLETE AND OPERATIONAL SYSTEM, WHICH INCLUDES THE COST FOR MATERIAL AND LABOR.

E. WORKMANSHIP AND NEAT APPEARANCE SHALL BE AS IMPORTANT AS THE OPERATION. DEFECTIVE OR DAMAGED MATERIALS SHALL BE REPLACED OR REPAIRED PRIOR TO FINAL ACCEPTANCE IN A MANNER ACCEPTABLE TO OWNER AND ENGINEER.

F. COMPLETE THE ENTIRE INSTALLATION AS SOON AS THE PROGRESS OF THE WORK WILL PERMIT. ARRANGE ANY OUTAGE OF SERVICE WITH THE OWNER AND BUILDING MANAGER IN ADVANCE. MINIMIZE DOWNTIME ON THE BUILDING ELECTRICAL SYSTEM.

G. THE ENTIRE ELECTRICAL SYSTEM INSTALLED UNDER THIS CONTRACT SHALL BE DELIVERED IN PROPER WORKING ORDER. REPLACE, WITHOUT ADDITIONAL COST TO THE OWNER, ANY DEFECTIVE MATERIAL AND EQUIPMENT WITHIN ONE YEAR FROM THE DATE OF FINAL ACCEPTANCE.

H. ANY ERROR, OMISSION OR DESIGN DISCREPANCY ON THE DRAWINGS SHALL BE BROUGHT TO THE ATTENTION OF THE ENGINEER FOR CLARIFICATION OR CORRECTION BEFORE CONSTRUCTION.

I. "PROVIDE" INDICATES THAT ALL ITEMS ARE TO BE FURNISHED, INSTALLED AND CONNECTED IN PLACE.

J. CONTRACTOR SHALL SECURE ALL NECESSARY BUILDING PERMITS AND PAY ALL REQUIRED FEES.

EQUIPMENT LOCATION

A. THE DRAWINGS INDICATE DIAGRAMMATICALLY THE DESIRED LOCATIONS OR ARRANGEMENTS OF CONDUIT RUNS, OUTLETS, EQUIPMENT, ETC. AND ARE TO BE FOLLOWED AS CLOSELY AS POSSIBLE. PROPER JUDGMENT MUST BE EXERCISED IN EXECUTING THE WORK SO AS TO SECURE THE BEST POSSIBLE INSTALLATION IN THE AVAILABLE SPACE AND TO OVERCOME LOCAL DIFFICULTIES DUE TO SPACE LIMITATIONS OR INTERFERENCE OF STRUCTURE CONDITIONS ENCOUNTERED.

B. IN THE EVENT CHANGES IN THE INDICATED LOCATIONS OR ARRANGEMENTS ARE NECESSARY, DUE TO FIELD CONDITIONS IN THE BUILDING CONSTRUCTION OR REARRANGEMENT OF FURNISHINGS OR EQUIPMENT, SUCH CHANGES SHALL BE MADE WITHOUT COST, PROVIDING THE CHANGE IS ORDERED BEFORE THE CONDUIT RUNS, ETC., AND WORK DIRECTLY CONNECTED TO THE SAME IS INSTALLED AND NO EXTRA MATERIALS ARE REQUIRED.

C. LIGHTING FIXTURES ARE SHOWN IN THEIR APPROXIMATE LOCATIONS ONLY. COORDINATE THE FIXTURE LOCATION WITH MECHANICAL EQUIPMENT TO AVOID INTERFERENCE.

D. COORDINATE THE WORK OF THIS SECTION WITH THAT OF ALL OTHER TRADES. WHERE CONFLICTS OCCUR, CONSULT WITH THE RESPECTIVE CONTRACTOR AND COME TO AGREEMENT AS TO CHANGES NECESSARY. OBTAIN WRITTEN ACCEPTANCE FROM ENGINEER FOR THE PROPOSED CHANGES BEFORE PROCEEDING.

SHOP DRAWINGS

A. SUBMIT SIX (6) COPIES OF SHOP DRAWINGS TO THE ARCHITECT FOR APPROVAL WITHIN 35 DAYS OF AWARD OF CONTRACT. SHOP DRAWINGS SHALL BE SUBMITTED IN A COMPLETE BOUND MANUAL INCLUDING LIGHT FIXTURES, SERVICE METERING, TRANSFER SWITCH, PANELBOARD, AND DISCONNECT SWITCHES. THE CONTRACTOR SHALL VERIFY DIMENSIONS OF EQUIPMENT TO INSURE THAT THEY FIT IN THE DESIGNATED AREA AND COMPLY WITH REQUIREMENTS OF ALL APPLICABLE CODES FOR REQUIRED WORKING CLEARANCES ABOUT ELECTRICAL EQUIPMENT PRIOR TO SUBMITTING SHOP DRAWINGS FOR APPROVAL. DEPARTURE FROM THE ABOVE WILL RESULT IN RE-SUBMITTAL AND DELAYS.

SUBSTITUTIONS

A. NO SUBSTITUTIONS ARE ALLOWED.

TESTS

A. BEFORE FINAL ACCEPTANCE OF WORK, THE CONTRACTOR SHALL INSURE THAT ALL EQUIPMENT, SYSTEMS, FIXTURES, ETC., ARE WORKING SATISFACTORILY AND TO THE INTENT OF THE DRAWINGS.

PERMITS

A. THE CONTRACTOR SHALL BE RESPONSIBLE FOR TAKING OUT AND PAYING FOR ALL THE REQUIRED PERMITS, INSPECTION AND EXAMINATION WITHOUT ADDITIONAL EXPENSE TO THE OWNER.

GROUNDING

A. THE CONTRACTOR SHALL PROVIDE A COMPLETE, AND APPROVED GROUNDING SYSTEM INCLUDING ELECTRODES, ELECTRODE CONDUCTOR, BONDING CONDUCTORS, AND EQUIPMENT CONDUCTORS AS REQUIRED BY ARTICLE 250 OF NATIONAL ELECTRICAL CODE.

B. CONDUITS CONNECTED TO EQUIPMENT AND DEVICES SHALL BE METALLICALLY JOINED TOGETHER TO PROVIDE EFFECTIVE ELECTRICAL CONTINUITY.

C. FEEDERS AND BRANCH CIRCUIT WIRING INSTALLED IN A NONMETALLIC CONDUIT SHALL INCLUDE A CODE SIZED GROUNDING CONDUCTOR HAVING GREEN INSULATION. THE GROUND CONDUCTOR SHALL BE PROPERLY CONNECTED AT BOTH ENDS TO MAINTAIN ELECTRICAL CONTINUITY.

D. REFER TO GROUND BUS DETAILS. PROVIDE NEW GROUND SYSTEM COMPLETE WITH CONDUCTORS, GROUND ROD AND DESCRIBED TERMINATIONS.

E. ALL GROUNDING CONDUCTORS SHALL BE SOLID TINNED COPPER AND ANNEALED #2 UNLESS NOTED OTHERWISE.

F. ALL NON-DIRECT BURIED TELEPHONE EQUIPMENT GROUND CONDUCTORS SHALL BE #2 STRANDED, THHN (GREEN) INSULATION.

G. ALL GROUND CONNECTIONS SHALL BE MADE WITH "HYGROUND" COMPRESSION SYSTEM BURNDY CONNECTORS EXCEPT WHERE NOTED OTHERWISE.

H. PAINT AT ALL GROUND CONNECTIONS SHALL BE REMOVED.

I. GROUNDING SYSTEM RESISTANCE SHALL NOT EXCEED 5 OHMS. IF THE RESISTANCE VALUE IS EXCEEDED, NOTIFY THE OWNER FOR FUTURE INSTRUCTION ON METHODS FOR REDUCING THE RESISTANCE VALUE. SUBMIT TEST REPORTS AND FURNISH TO SMART SMR ONE COMPLETE SET OF PRINTS SHOWING "INSTALLED WORK".

UTILITY SERVICE

A. TELEPHONE AND ELECTRICAL METERING FACILITIES SHALL CONFORM TO THE REQUIREMENTS OF THE SERVING UTILITY COMPANIES. CONTRACTOR SHALL VERIFY SERVICE LOCATIONS AND REQUIREMENTS. SERVICE INFORMATION WILL BE FURNISHED BY THE SERVING UTILITIES.

B. CONFORM TO ALL REQUIREMENTS OF THE SERVING UTILITY COMPANIES.

PRODUCTS

A. ALL MATERIALS SHALL BE NEW, CONFORMING WITH THE NEC, ANSI, NEMA AND THEY SHALL BE U.L. LISTED AND LABELED.

B. CONDUIT

1. RIGID CONDUIT SHALL BE U.L. LABEL GALVANIZED ZINC COATED WITH ZINC INTERIOR AND SHALL BE USED WHEN INSTALLED IN OR UNDER CONCRETE SLABS, IN CONTACT WITH THE EARTH, UNDER PUBLIC ROADWAYS, IN MASONRY WALLS OR EXPOSED ON BUILDING EXTERIOR. RIGID CONDUIT IN CONTACT WITH EARTH SHALL BE 1/2 LAPPED WRAPPED WITH HUNTS WRAP PROCESS NO. 3.
2. ELECTRICAL METALLIC TUBING SHALL HAVE U.L. LABEL. FITTINGS SHALL BE COMPRESSION TYPE. EMT SHALL BE USED ONLY FOR INTERIOR RUNS.
3. FLEXIBLE METALLIC CONDUIT SHALL HAVE U.L. LISTED LABEL AND MAY BE USED WHERE PERMITTED BY CODE. FITTINGS SHALL BE "JAKE" OR "SQUEEZE" TYPE. SEAL TIGHT FLEXIBLE CONDUIT. ALL CONDUIT IN EXCESS OF SIX FEET IN LENGTH SHALL HAVE FULL SIZE GROUND WIRE.
4. CONDUIT RUNS MAY BE SURFACE MOUNTED IN CEILING OR WALLS UNLESS INDICATED OTHERWISE. CONDUIT INDICATED SHALL RUN PARALLEL OR AT RIGHT ANGLES TO CEILING, FLOOR OR BEAMS. VERIFY EXACT ROUTING OF ALL EXPOSED CONDUIT WITH ARCHITECT PRIOR TO INSTALLING.
5. ALL UNDERGROUND CONDUITS SHALL BE PVC SCHEDULE 40 (UNLESS NOTED OTHERWISE) AT A MINIMUM DEPTH OF 24" BELOW GRADE.
6. ALL CONDUIT ONLY (EOC) SHALL HAVE PULL WIRE.
7. CONDUITS RUN ON ROOFS SHALL BE INSTALLED ON 4 x 4 REDWOOD SLEEPERS (6'-0" ON CENTER) SET IN NON-HARDENING MASTIC.

C. ALL WIRE AND CABLE SHALL BE COPPER, 600 VOLT, #12 AWG MINIMUM UNLESS SPECIFICALLY NOTED OTHERWISE ON THE DRAWINGS. CONDUCTORS #10 AWG AND SMALLER SHALL BE SOLID. CONDUCTORS #8 AWG AND LARGER SHALL BE STRANDED. TYPE THHN INSULATION USED UNLESS CONDUCTORS INSTALLED IN CONDUIT EXPOSED TO WEATHER, IN WHICH CASE TYPE THWN INSULATION SHALL BE USED.

D. PROVIDE GALVANIZED COATED STEEL BOXES AND ACCESSORIES SIZED PER CODE TO ACCOMMODATE ALL DEVICES AND WIRING.

E. DUPLEX RECEPTACLES SHALL BE SPECIFICATION GRADE WITH WHITE FINISH (UNLESS NOTED BY ENGINEER), 20 AMP, 125 VOLT, THREE WIRE GROUNDING TYPE, NEMA 5-20R. MOUNT RECEPTACLE AT +12" ABOVE FINISHED FLOOR UNLESS OTHERWISE INDICATED ON DRAWINGS OR IN DETAILS. WEATHERPROOF RECEPTACLES SHALL BE GROUND FAULT INTERRUPTER TYPE WITH SIERRA #WPD-8 LIFT COVERPLATES.

F. TOGGLE SWITCHES SHALL BE 20 AMP, 120 VOLT AC, SPECIFICATION GRADE, WHITE (UNLESS NOTED OTHERWISE) FINISH. MOUNT SWITCHES AT +48" ABOVE FINISHED FLOOR.

G. PANELBOARDS SHALL BE DEAD FRONT SAFETY TYPE WITH ANTI-BURN SOLDERLESS COMPRESSION APPROVED FOR COPPER CONDUCTORS. COPPER BUS BARS, FULL SIZED NEUTRAL BUS, GROUND BUS AND EQUIPPED WITH QUICK-MAKE QUICK-BREAK BOLT-IN TYPE THERMAL MAGNETIC CIRCUIT BREAKERS. MOUNT TOP OF THE PANELBOARDS AT 6'-3" ABOVE FINISHED FLOOR. PROVIDE TYPEWRITTEN CIRCUIT DIRECTORY.

H. ALL CIRCUIT BREAKERS, MAGNETIC STARTERS AND OTHER ELECTRICAL EQUIPMENT SHALL HAVE AN INTERRUPTING RATING NOT LESS THAN MAXIMUM SHORT CIRCUIT CURRENT TO WHICH THEY MAY BE SUBJECTED.

I. GROUND RODS SHALL BE COPPER CLAD STEEL, 5/8" ROUND AND 10' LONG, COPPERWELD OR APPROVED EQUAL.

INSTALLATION

A. PROVIDE SUPPORTING DEVICES FOR ALL ELECTRICAL EQUIPMENT, FIXTURES, BOXES, PANEL, ETC. SUPPORT LUMINARIES FROM UNDERSIDE OF STRUCTURAL CEILING. EQUIPMENT SHALL BE BRACED TO WITHSTAND HORIZONTAL FORCES IN ACCORDANCE WITH STATE AND LOCAL CODE REQUIREMENTS. PROVIDE PROPER ALIGNMENT AND LEVELING OF ALL DEVICES AND FIXTURES.

CUTTING, PATCHING, CHASES, OPENINGS: PROVIDE LAYOUT IN ADVANCE TO ELIMINATE UNNECESSARY CUTTING OR DRILLING OF WALLS, FLOORS, CEILINGS, AND ROOFS. ANY DAMAGE TO BUILDING STRUCTURE OR EQUIPMENT SHALL BE REPAIRED BY THE CONTRACTOR. OBTAIN PERMISSION FROM THE ENGINEER BEFORE CORING.

C. IN DRILLING HOLES INTO CONCRETE WHETHER FOR FASTENING OR ANCHORING PURPOSES OR PENETRATIONS THROUGH THE FLOOR FOR CONDUIT RUNS, PIPE RUNS, ETC., IT MUST BE CLEARLY UNDERSTOOD THAT TENDONS AND/OR REINFORCING STEEL WILL NOT BE DRILLED INTO, CUT OR DAMAGED UNDER ANY CIRCUMSTANCES.

D. LOCATION OF TENDONS AND/OR REINFORCING STEEL ARE NOT DEFINITELY KNOWN AND THEREFORE, MUST BE SEARCHED FOR BY APPROPRIATE METHODS AND EQUIPMENT VIA X-RAY OR OTHER DEVICES THAT CAN ACCURATELY LOCATE THE REINFORCING AND/OR STEEL TENDONS.

E. PENETRATIONS IN FIRE RATED WALLS SHALL BE FIRE STOPPED IN ACCORDANCE WITH THE REQUIREMENTS OF THE C.B.C.

PROJECT CLOSEOUT

A. UPON COMPLETION OF WORK, CONDUCT CONTINUITY, SHORT CIRCUIT, AND FALL POTENTIAL GROUNDING TESTS FOR APPROVAL. SUBMIT TEST REPORTS TO PROJECT MANAGER. CLEAN PREMISES OF ALL DEBRIS RESULTING FROM WORK AND LEAVE WORK IN A COMPLETE AND UNDAMAGED CONDITION.

B. PROVIDE PROJECT MANAGER WITH ONE SET OF COMPLETE ELECTRICAL "AS INSTALLED" DRAWINGS AT THE COMPLETION OF THE JOB, SHOWING ACTUAL DIMENSIONS, ROUTINGS AND CIRCUITS.

C. ALL BROCHURES, OPERATING MANUALS, CATALOG, SHOP DRAWINGS ETC. SHALL BE TURNED OVER TO OWNER AT JOB COMPLETION.

GROUNDING NOTES

1. ALL DETAILS ARE SHOWN IN GENERAL TERMS. ACTUAL GROUNDING INSTALLATION REQUIREMENTS AND CONSTRUCTION ACCORDING TO SITE CONDITIONS.
2. ALL GROUNDING CONDUCTORS: #2 AWG SOLID BARE TINNED COPPER WIRE UNLESS OTHERWISE NOTES.
3. GROUND BAR LOCATED IN BASE OF EQUIPMENT WILL BE PROVIDED, FURNISHED AND INSTALLED BY THE VENDOR.
4. ALL BELOW GRADE CONNECTIONS: EXOTHERMIC WELD TYPE. ABOVE GRADE CONNECTIONS: EXOTHERMIC WELD TYPE.
5. GROUND RING SHALL BE LOCATED A MINIMUM OF 24" BELOW GRADE OR 8" MINIMUM BELOW THE FROST LINE.
6. INSTALL GROUND CONDUCTORS AND GROUND ROD MINIMUM OF 1'-0" FROM EQUIPMENT CONCRETE SLAB, SPREAD FOOTING, OR FENCE.
7. EXOTHERMIC WELD GROUND CONNECTION TO FENCE POST. TREAT WITH A COLD GALVANIZED SPRAY.
8. GROUND BARS

8.1 EQUIPMENT GROUND BUS BAR (EGB) LOCATED AT BOTTOM OF ANTENNA POLE/MAST FOR MAKING GROUNDING JUMPER CONNECTIONS TO COAX FEEDER CABLES SHALL BE FURNISHED AND INSTALLED BY ELECTRICAL CONTRACTOR. JUMPERS (FURNISHED BY OWNERS) SHALL BE INSTALLED AND CONNECTED BY ELECTRICAL CONTRACTOR.

8.2 MAIN GROUND BUS BAR (MGB) LOCATED NEAR THE BASE OF THE RADIO EQUIPMENT CABINET(S) SHALL BE FURNISHED AND INSTALLED BY ELECTRICAL CONTRACTOR.

9. ALL GROUNDING INSTALLATIONS AND CONNECTIONS SHALL BE MADE BY ELECTRICAL CONTRACTOR.
10. OBSERVE N.E.C. AND LOCAL UTILITY REQUIREMENTS FOR ELECTRICAL SERVICE GROUNDING.
11. GROUNDING ATTACHMENT TO TOWER SHALL BE AS PER MANUFACTURER'S RECOMMENDATIONS OR AT GROUNDING POINTS PROVIDED (2 MINIMUM).
12. IF EQUIPMENT IS IN A C.L. FENCE ENCLOSURE, GROUND ONLY CORNER POSTS AND SUPPORT POSTS OF GATE. IF CHAIN LINK LID IS USED, THEN GROUND LID ALSO.
13. GROUNDING @ PPC CABINET SHALL BE VERTICALLY INSTALLED.
14. ALL GROUNDING FOR ANTENNAS SHALL BE CONNECTED SO THAT IT WILL BY-PASS MAIN BUSS BAR.
15. ALL EMT RUNS SHALL BE GROUNDED AND HAVE A BUSHING. NO PVC ABOVE GROUND.
16. USE SEPARATE HOLES FOR GROUNDING @ BUSS BAR. NO "DOUBLING-UP" OF LUGS.
17. POWER AND TELCO CABS. SHALL BE GROUNDED (BONDED) TOGETHER IS NO. 'L' AND 'B' ALLOWED ON GROUNDING.
18. PROVIDE STAINLESS STEEL CLAM AND BRASS TAGS ON COAX @ ANTENNAS AND DOGHOUSE.

ELECTRICAL GENERAL NOTES | 1

NOT USED | 3

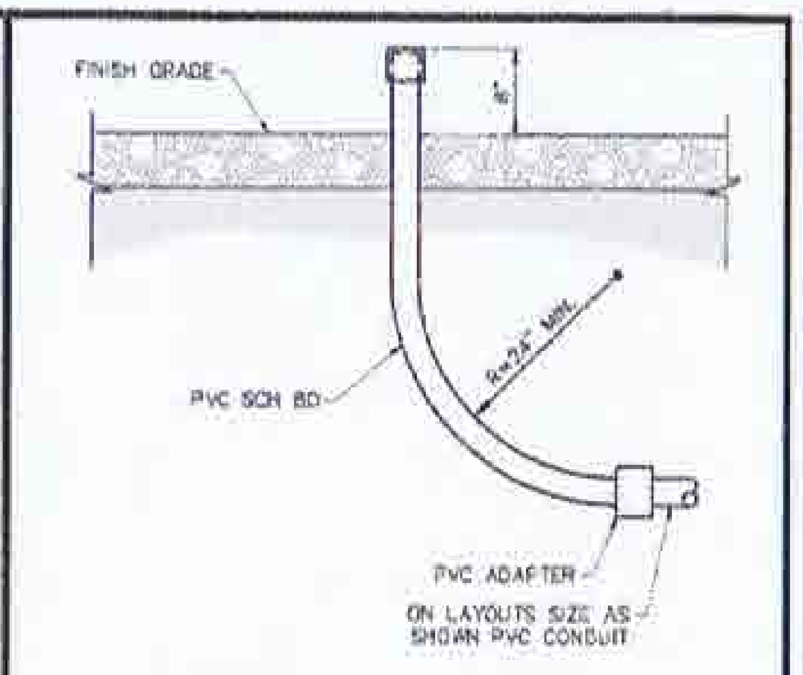

CONDUIT STUB-UP DETAIL | 2

APPLICANT: The NEW at&t, 1452 EDINGER AVE., 3RD FLOOR, TUSTIN, CA 92780

ENGINEER: Eukon, an SFC Communications, Inc. Company, 65 POST, SUITE 1000, IRVINE, CA 92618, TEL: (949) 553-8566, www.eukongroup.com

DRAWN BY: AG
CHECKED BY: AG

REVISIONS

REV	DATE	DESCRIPTION
0	11/10/20	100% CONSTRUCTION DRAWING
A	11/03/20	90% CONSTRUCTION DRAWING

LICENSEE

DATE SIGNED: 11-19-20

PROJECT INFORMATION: CSLC4176, 300 ALBIREO AVE., LOMPOC, CA 93436

SHEET TITLE: ELECTRICAL NOTES & DETAILS

SHEET NUMBER: E-3

PANEL PPC

MOUNTING: SURFACE — DOUBLE LUG: NO

VOLTS: 120|240 — MAIN: 200A/2P
PHASE: 1 — BUS: 200A
WIRE: 3 — A.I.C.: 42K SERIES W/ MAIN

WIRE SIZE	LOCATION	A	B	LCL	CONV	KIT	RECP	MISC	BKR	CIRC	A/B	CIRC	BKR	MISC	RECP	KIT	CONV	LCL	A	B	LOCATION	WIRE SIZE
8	Rectifier	2880						1	30/2	1	A	2	20/2	1					1800		HVAC	12
8	-----		2880					1	-	3	B	4	-	1						1800	-----	12
8	Rectifier	2880						1	30/2	5	A	6	20/2								SPARE	
8	-----		2880					1	-	7	B	8	-								-----	
8	Rectifier	2880						1	30/2	9	A	10	20/1		1				360		RECEPTACLES	12
8	-----		2880					1	-	11	B	12	20/1					1		500	INT & EMER LTG	12
8	Rectifier	2880						1	30/2	13	A	14	20/1					1	500		EXTERIOR LTG	12
8	-----		2880					1	-	15	B	16	20/1								SPARE	
8	Rectifier	2880						1	30/2	17	A	18	20/1								SPARE	
8	-----		2880					1	-	19	B	20	20/1								SPARE	
8	Rectifier	2880						1	30/2	21	A	22	20/1								SPARE	
8	-----		2880					1	-	23	B	24	20/1								SPARE	
	SPARE								30/2	25	A	26									SPACE	
	-----								-	27	B	28									SPACE	
	SPARE								30/2	29	A	30									SPACE	
	-----								-	31	B	32									SPACE	
	SPARE								30/2	33	A	34									SPACE	
	-----								-	35	B	36									SPACE	
	SPARE								20/1	37	A	38									SPACE	
12	FIRE SYSTEM		100					1	20/1	39	B	40								500	BATTERY CHARGER	
12	GFCI RECEPTACLES	360					1		20/1	41	A	42							500		BLOCK HEATER	

A= 18640 B= 17880
W/LCL A= 18640 W/LCL B= 18005

TOTAL VA= 36520 W/LCL= 36645 W/LCL AMPS= **153** TOTAL LCL= 500 X.25 = 125
HIGH PHASE VA= 18640 W/LCL= 18765 HIGH PH AMPS= **156** HIGH PHASE LCL= 500 X.25 = 125

APPLICANT
The NEW at&t
1452 EDINGER AVE., 3RD FLOOR
TUSTIN, CA 92780

ENGINEER
Eukon
an SPC Communications, Inc. Company
65 POST, SUITE 1000
IRVINE, CA 92618
TEL: (949) 553-8566
www.eukongroup.com

DRAWN BY: AG
CHECKED BY: AG

REVISIONS

REV	DATE	DESCRIPTION
0	11/10/20	100% CONSTRUCTION DRAWING
A	11/03/20	90% CONSTRUCTION DRAWING

LICENSEE

DATE SIGNED: 11-18-20

PROJECT INFORMATION
CSL04176
300 ALBIREO AVE.
LOMPOC, CA 93436

SHEET TITLE
PANEL SCHEDULE

SHEET NUMBER
E-4

● EXOTHERMIC CONNECTION ■ MECHANICAL CONNECTION

GROUND ROD

LEGEND

1. GROUNDING IS SHOWN DIAGRAMMATICALLY ONLY.
2. CONTRACTOR SHALL GROUND ALL EQUIPMENT AS A COMPLETE SYSTEM. GROUNDING SHALL BE IN COMPLIANCE WITH NEC SECTION 250 AND AT&T GROUNDING AND BONDING REQUIREMENTS (ATT-TP-76416) AND MANUFACTURER'S SPECIFICATIONS.
3. ALL GROUND CONDUCTORS SHALL BE COPPER. NO ALUMINUM CONDUCTORS SHALL BE USED.

NOTES

(A) EXTERIOR GROUND RING: #2 AWG SOLID COPPER, BURIED AT A DEPTH OF AT LEAST 30 INCHES BELOW GRADE, OR 6 INCHES BELOW THE FROST LINE AND APPROXIMATELY 24 INCHES FROM THE EXTERIOR WALL OF FOOTING. (ATT-TP-76416 2.2.3.5/7.5.1)

(B) TOWER GROUND RING: THE GROUND RING SYSTEM SHALL BE INSTALLED AROUND AN ANTENNA TOWER'S LEGS, AND/OR GUY ANCHORS. WHERE SEPARATE SYSTEMS HAVE BEEN PROVIDED FOR THE TOWER AND THE BUILDING, AT LEAST TWO BONDS SHALL BE MADE BETWEEN THE TOWER RING GROUND SYSTEM AND THE BUILDING RING GROUND SYSTEM USING MINIMUM #2 AWG SOLID COPPER CONDUCTORS. (ATT-TP-76416 7.5.1)

(C) INTERIOR GROUND RING: #2 AWG STRANDED GREEN INSULATED COPPER CONDUCTOR EXTENDED AROUND THE PERIMETER OF THE EQUIPMENT AREA. ALL NON-TELECOMMUNICATIONS RELATED METALLIC OBJECTS FOUND WITHIN A SITE SHALL BE GROUNDED TO THE INTERIOR GROUND RING WITH #6 AWG STRANDED GREEN INSULATED CONDUCTOR. (ATT-TP-76416 7.6.4)

(D) BOND TO INTERIOR GROUND RING: #2 AWG SOLID TINNED COPPER WIRE PRIMARY BONDS SHALL BE PROVIDED AT LEAST AT FOUR POINTS ON THE INTERIOR GROUND RING, LOCATED AT THE CORNERS OF THE BUILDING. (ATT-TP-76416 7.4.2.2)

(E) GROUND ROD: UL LISTED COPPER CLAD STEEL, MINIMUM 5/8" DIAMETER BY EIGHT FEET LONG. ALL GROUND RODS MAY BE INSTALLED WITH INSPECTION SLEEVES. GROUND RODS SHALL BE DRIVEN TO THE DEPTH OF GROUND RING CONDUCTOR. (ATT-TP-76416 1.9 / 2.2.3.10)

(F) CELL REFERENCE GROUND BAR: POINT OF GROUND REFERENCE FOR ALL COMMUNICATIONS EQUIPMENT FRAMES. ALL BONDS ARE MADE WITH #2 AWG STRANDED GREEN INSULATED COPPER CONDUCTORS. BOND TO GROUND RING WITH (2) #2 SOLID TINNED COPPER CONDUCTORS. (ATT-76416 7.6.3)

(G) HATCH PLATE GROUND BAR: BOND TO THE INTERIOR GROUND RING WITH TWO #2 AWG STRANDED GREEN INSULATED COPPER CONDUCTORS. WHEN A HATCH-PLATE AND A CELL REFERENCE GROUND BAR ARE BOTH PRESENT, THE CROB MUST BE CONNECTED TO THE HATCH-PLATE AND TO THE INTERIOR GROUND RING USING TWO #2 AWG STRANDED GREEN INSULATED COPPER CONDUCTORS.

(H) EXTERIOR CABLE ENTRY PORT GROUND BARS: LOCATED AT THE ENTRANCE TO THE CELL SITE BUILDING. BOND TO GROUND RING WITH A #2 AWG SOLID TINNED COPPER CONDUCTORS WITH AND EXOTHERMIC WELD AND INSPECTION SLEEVE. (ATT-TP-76416 7.6.7.2)

(J) TOWER EXIT GROUND BAR: #2 AWG SOLID TINNED COPPER BOND TO THE TOWER GROUND RING. (ATT-TP-76416 7.35)

(K) GROUND BAR: BOND TO BOTH CELL REFERENCE GROUND BAR AND EXTERIOR GROUND RING. (ATT-TP-76416 7.6.8)

(L) FRAME BONDING: THE BONDING POINT FOR TELECOM EQUIPMENT FRAMES SHALL BE THE GROUND BUS THAT IS NOT ISOLATED FROM THE EQUIPMENTS METAL FRAMEWORK. BOND THE FRAME GROUND BUS TO THE TP SECTION OF THE CELL REFERENCE GROUND BAR. (ATT-TP-76416 7.8)

(M) INTERIOR UNIT BONDS: METAL FRAMES, CABINETS AND INDIVIDUAL METALLIC UNITS LOCATED WITH THE AREA OF THE INTERIOR GROUND RING REQUIRE A #6 AWG STRANDED GREEN INSULATED COPPER BOND TO THE INTERIOR GROUND RING. (ATT-TP-76416 7.19.3.1)

(N) FENCE AND GATE GROUNDING: METAL FENCES WITHIN 7 FEET OF THE EXTERIOR GROUND RING OR OBJECTS BONDED TO THE EXTERIOR GROUND RING SHALL BE BONDED TO THE GROUND RING WITH A #2 AWG SOLID TINNED COPPER CONDUCTOR AT AN INTERVAL NOT EXCEEDING 25 FEET. BONDS SHALL BE MADE AT EACH GATE POST AND ACROSS GATE OPENINGS. (ATT-TP-76416 7.19.2.2)

(P) EXTERIOR UNIT BONDS: METALLIC OBJECTS, EXTERNAL TO OR MOUNTED TO THE BUILDING, SHALL BE BONDED TO THE EXTERIOR GROUND RING. (ATT-TP-76416 7.4.2.6)

(Q) DC BRIDGE SUPPORTS: EACH DC BRIDGE LEG SHALL BE BONDED TO THE GROUND RING WITH #2 AWG BARE TINNED COPPER CONDUCTOR. PROVIDE EXOTHERMIC WELDS AT BOTH THE DC BRIDGE LEG AND BURIED GROUND RING. (ATT-TP-76416 7.4.2.6)

(R) DURING ALL DC POWER SYSTEM CHANGES INCLUDING DC SYSTEM CHANGE OUTS, RECTIFIER REPLACEMENTS OR ADDITIONS, BREAKER DISTRIBUTION CHANGES, BATTERY ADDITIONS, BATTERY REPLACEMENTS AND INSTALLATIONS OR CHANGES TO DC CONVERTER SYSTEMS IT SHALL BE REQUIRED THAT SERVICES CONTRACTORS VERIFY ALL DC POWER SYSTEMS ARE EQUIPPED WITH A MASTER DC SYSTEM RETURN GROUND CONDUCTOR FROM THE DC POWER SYSTEM COMMON RETURN BUS DIRECTLY CONNECTED TO THE CELL SITE REFERENCE GROUND BAR (CRGB) PER TP76300 SECTION H.8 AND TP76416 FIGURE 7-11 REQUIREMENTS.

GROUNDING ANTENNA ONE-LINE | 1

(TYPICAL PER SECTOR)

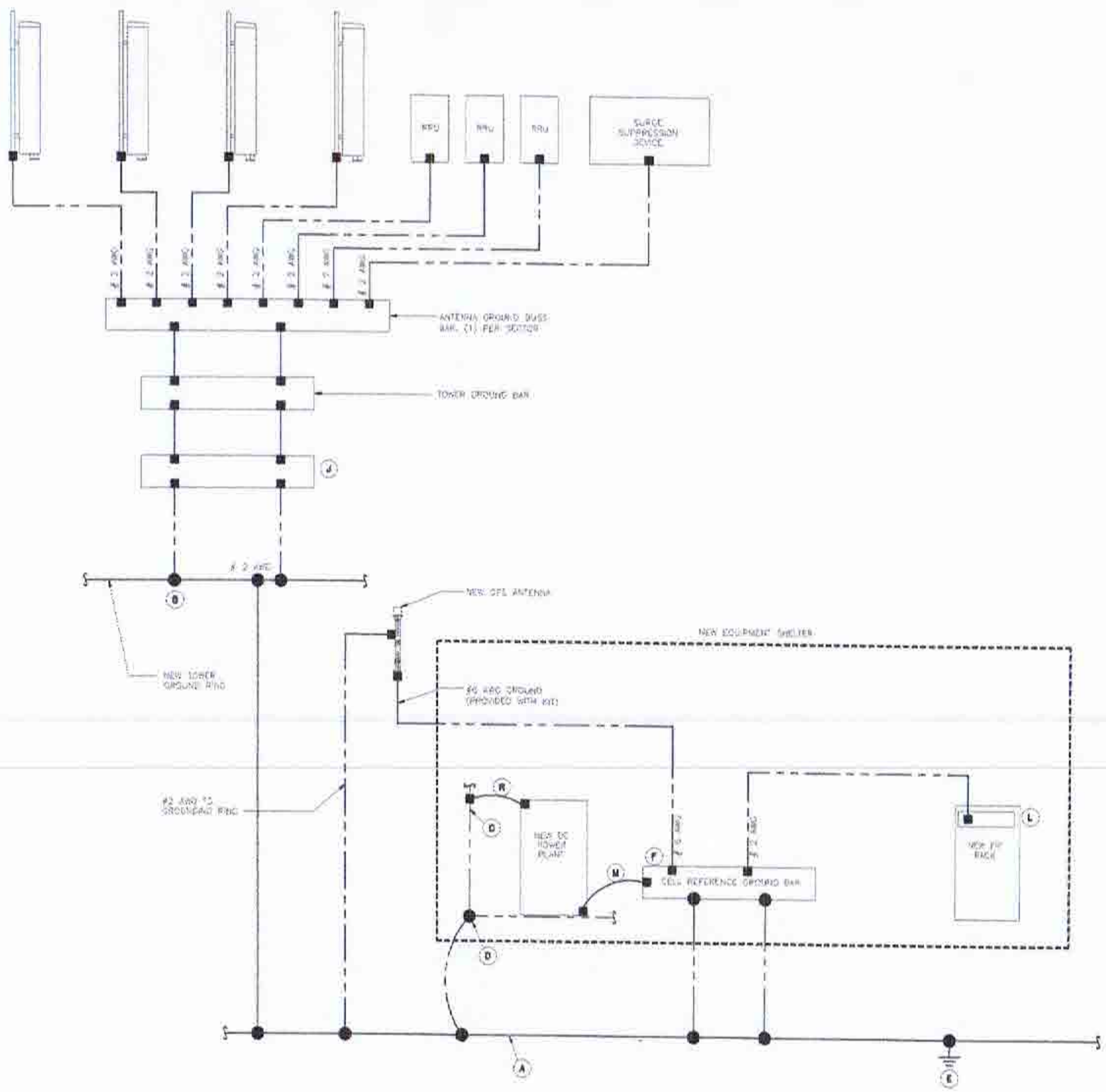

GROUNDING ANTENNA ONE-LINE | 2

APPLICANT:

The NEW at&t

1452 EDINGER AVE., 3RD FLOOR
TUSTIN, CA 92780

ENGINEER:

Eukon
an SFC Communications, Inc. Company
65 POST, SUITE 1000
IRVINE, CA 92618
TEL: (949) 553-8566
www.eukongroup.com

DRAWN BY: AG
CHECKED BY: AG

REVISIONS:

REV	DATE	DESCRIPTION
0	11/10/20	100% CONSTRUCTION DRAWING
A	11/03/20	90% CONSTRUCTION DRAWING

LICENSEE:

DATE SIGNED: 11-19-20

PROJECT INFORMATION:

CSL04176
300 ALBIREO AVE.
LOMPOC, CA 93436

SHEET TITLE:

EQUIPMENT GROUNDING PLAN

SHEET NUMBER:

G-1

EXOTHERMIC	■
COMPRESSION TYPE CONNECTIONS	●
CHEMICAL ELECTROLYTIC GROUNDING SYSTEM	⊗
GROUND ROD WITH INSPECTION SLEEVE	
TEST GROUND ROD WITH INSPECTION SLEEVE	
EXOTHERMIC WITH INSPECTION SLEEVE	
GROUNDING CONDUCTOR	
GROUNDING BAR	

THIS PLAN IS A SCHEMATIC ONLY AND DOES NOT SHOW ALL THE GROUNDING PROVIDED BY THE SHELTER MANUFACTURER. CONTRACTOR SHALL NOTIFY AT&T IF ANY GROUNDING TO BE PROVIDED IS INCOMPLETE OR MISSING.

NOTE:
CONTRACTOR TO IMPLEMENTALL GROUNDING REQUIREMENTS AS SPECIFIED BY CARRIER CONSTRUCTION AND INSTALLATION GUIDELINES.

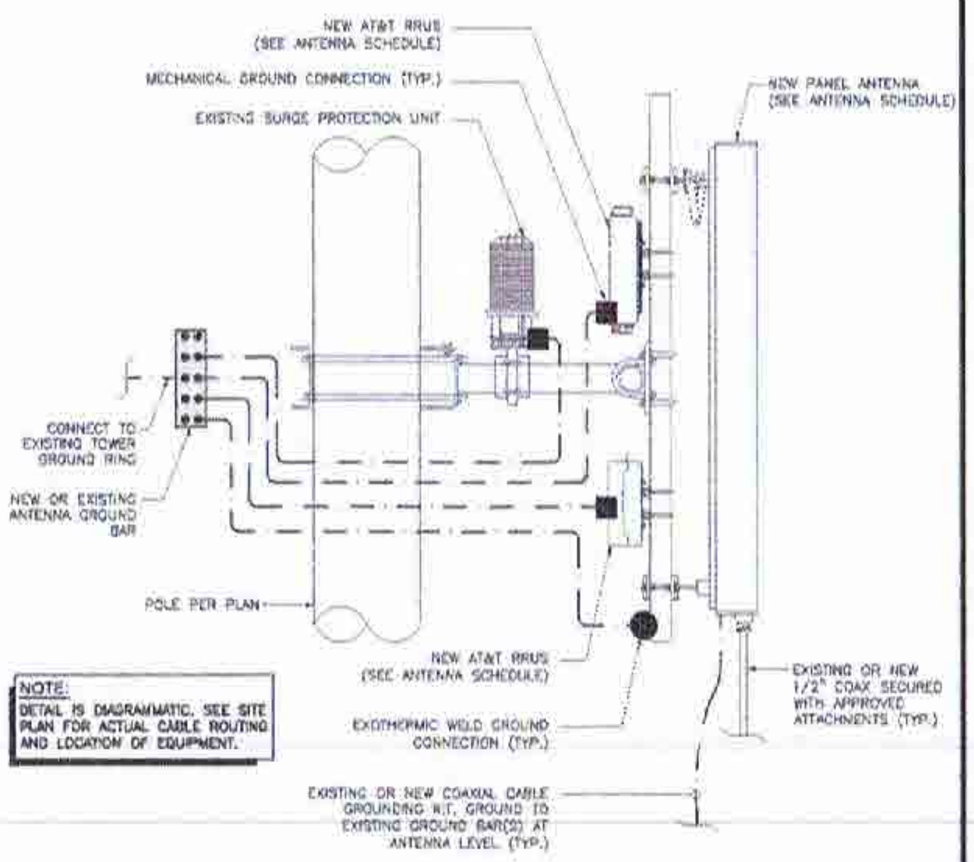

NOTE:
DETAIL IS DIAGRAMMATIC. SEE SITE PLAN FOR ACTUAL CABLE ROUTING AND LOCATION OF EQUIPMENT.

NOTE:

1. ALL GROUNDING CONDUCTORS: #2 AWG SOLID BARE TINNED COPPER WIRE UNLESS OTHERWISE NOTED.3
2. GROUND BAR LOCATED IN BASE OF EQUIPMENT WILL BE PROVIDED, FURNISHED AND INSTALLED BY THE VENDOR.
3. ALL BELOW GRADE CONNECTIONS: EXOTHERMIC WELD TYPE. ABOVE GRADE CONNECTIONS: EXOTHERMIC WELD TYPE.

ANTENNA AND EQUIPMENT GROUNDING | 2

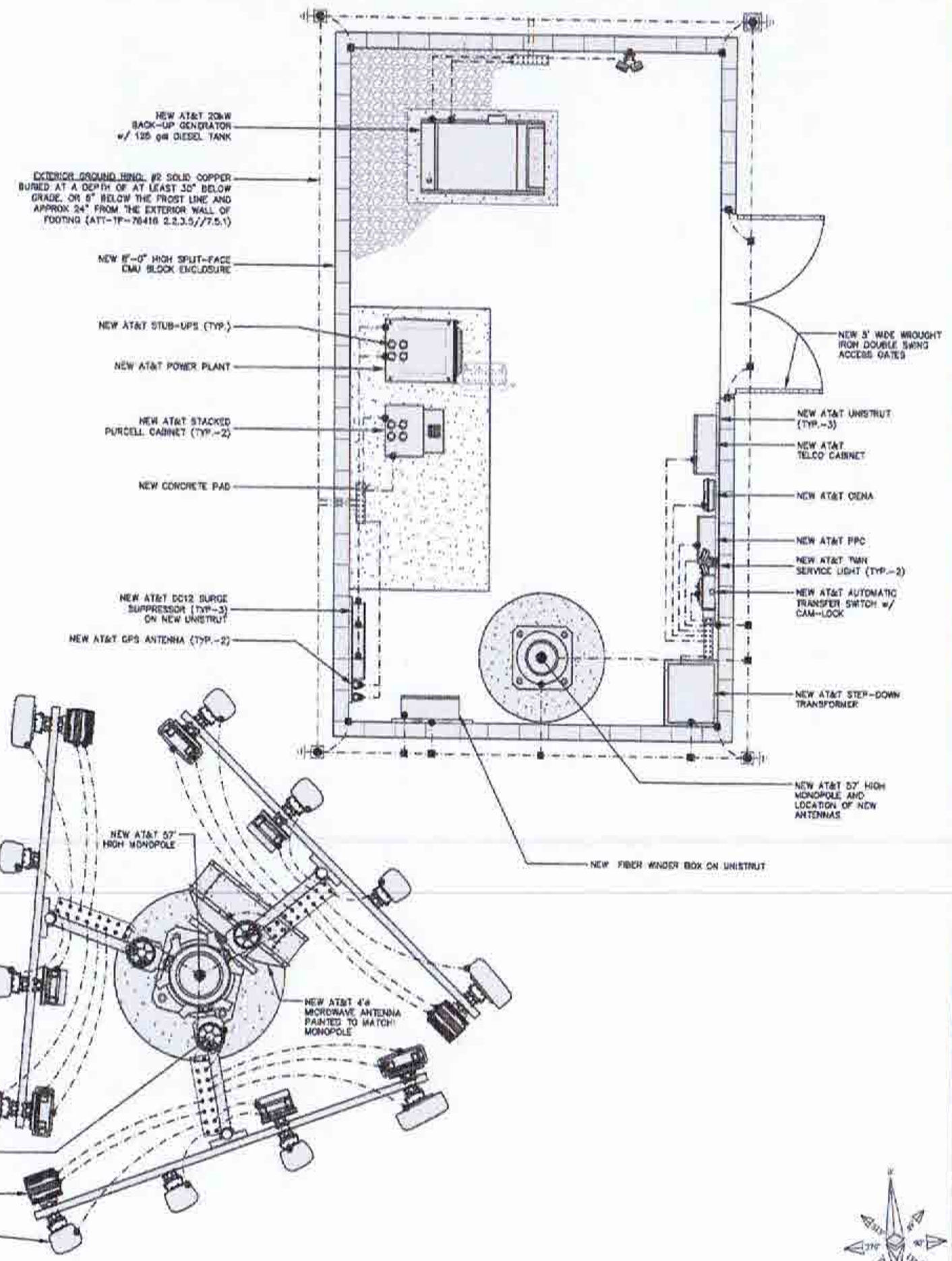

GROUNDING PLAN | SCALE NONE | 1

APPLICANT

The NEW at&t

1452 EDINGER AVE., 3RD FLOOR
TUSTIN, CA 92780

ENGINEER

Eukon
an EFC Communications, Inc. Company
65 POST, SUITE 1000
IRVINE, CA 92618
TEL: (949) 553-8566
www.eukongroup.com

DRAWN BY:	AG
CHECKED BY:	AG

REVISIONS

REV	DATE	DESCRIPTION
0	11/19/20	100% CONSTRUCTION DRAWING
A	11/03/20	90% CONSTRUCTION DRAWING

LICENSEE

DATE SIGNED: 11-19-20

PROJECT INFORMATION

CSL04176
300 ALBIREO AVE.
LOMPOC, CA 93436

SHEET TITLE

EQUIPMENT GROUNDING PLAN

SHEET NUMBER

G-2

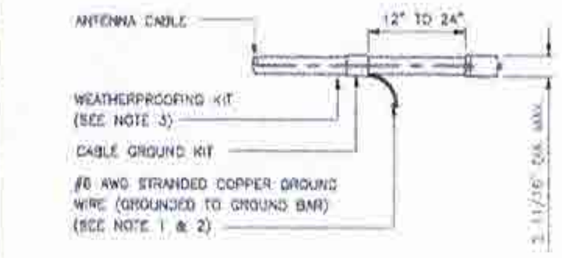

NOTES:

1. DO NOT INSTALL CABLE GROUND KIT AT A BEND AND ALWAYS DIRECT GROUND WIRE DOWN TO GROUND BAR.
2. GROUNDING KIT SHALL BE TYPE AND PART NUMBER AS SUPPLIED OR RECOMMENDED BY CABLE MANUFACTURER.
3. WEATHER PROOFING SHALL BE (TYPE AND PART NUMBER AS SUPPLIED OR RECOMMENDED BY CABLE MANUFACTURER.)

CONN. OF CABLE GND KIT TO ANT. | 1

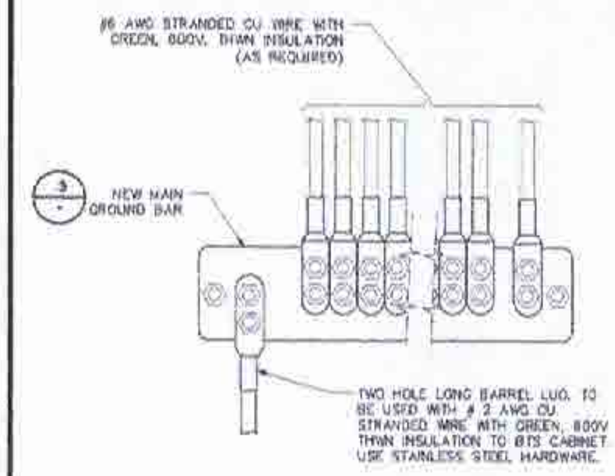

INSTALLATION OF GND WIRE TO GND BAR | 2

NOTE:

HOLE CENTERS TO MATCH NEMA DOUBLE LUG CONFIGURATION.

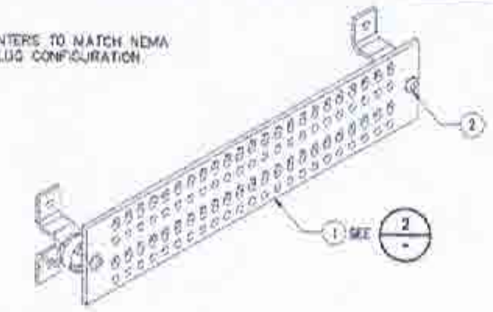

1- UNIVERSAL TINNED COPPER BUSS BAR WITH HARDWARE BY ANDREW CORPORATION

UGBKIT-0420-T : 1/4"x4"x20" (SHOWN)
UGBKIT-0412-T : 1/4"x4"x12"
UGBKIT-0210-T : 1/4"x2"x10"
GB-NKU : MOUNTING HARDWARE KIT

2- ANDREW #TC0674KEY TAMPER RESISTANT BUSS BAR BOLT KIT

GROUND BAR DETAIL | 3

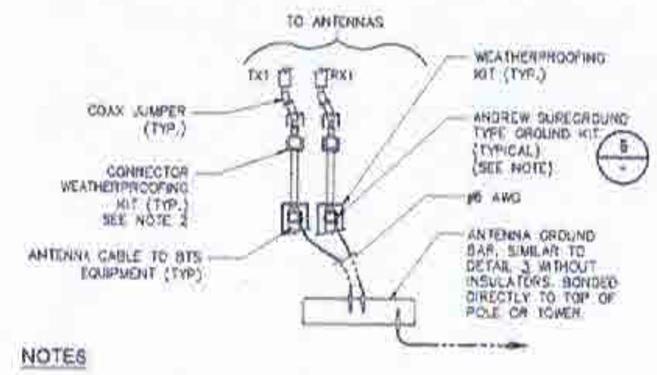

NOTES

1. DO NOT INSTALL CABLE GROUND KIT AT A BEND AND ALWAYS DIRECT GROUND WIRE DOWN TO ANTENNA GROUND BAR.
2. WEATHER PROOFING SHALL BE ANDREW TWO-PART TAPE KIT. COLD SHRINK SHALL NOT BE USED.

CONN. OF GRND WIRE TO GRND BAR, TOWER | 4

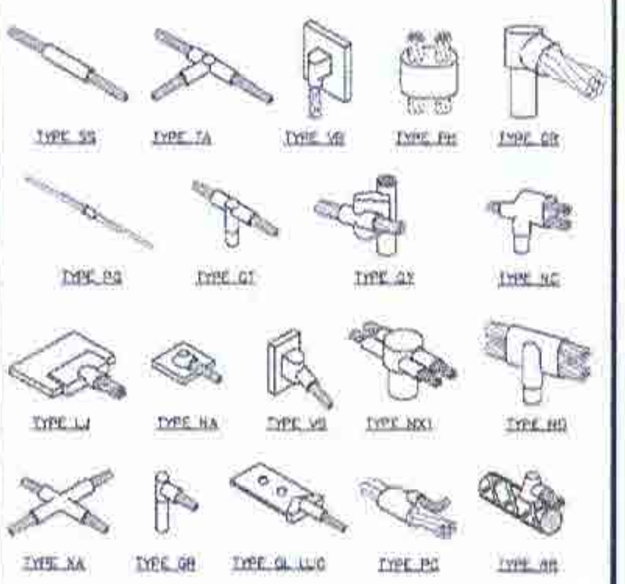

EXOTHERMIC WELD CONNECTION | 5

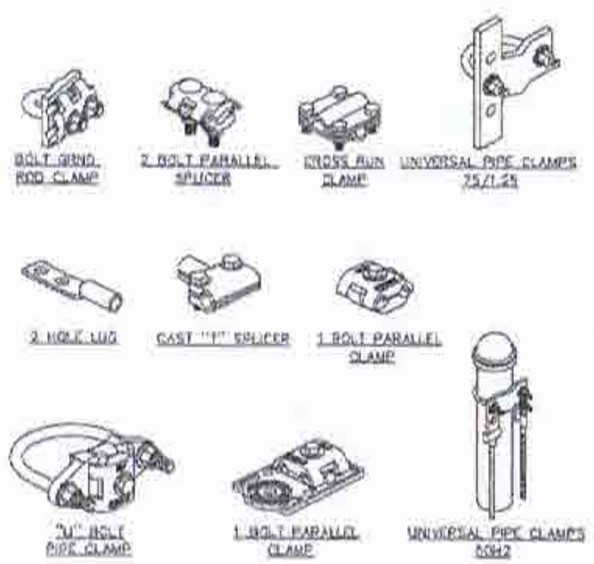

MECHANICAL CONNECTION | 6

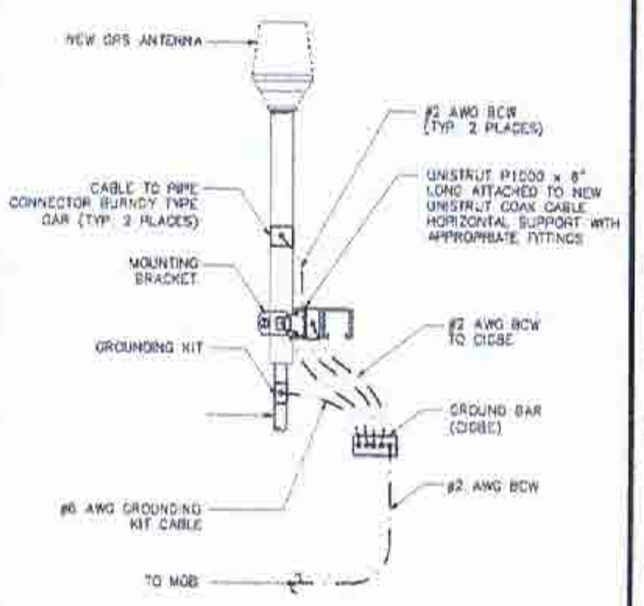

GPS ANTENNA GROUNDING | 7

NOTES

1. NUMBER OF GROUNDING BARS MAY VARY DEPENDING ON THE TYPE OF TOWER, ANTENNA LOCATION, AND CONNECTION ORIENTATION. THE SUBCONTRACTOR SHALL BE RESPONSIBLE FOR INSTALLING ADDITIONAL GROUNDING BAR AS REQUIRED, PROVIDING 50% SPARE CONNECTION POINTS.
2. DO NOT INSTALL CABLE GROUNDING KIT AT A BEND AND ALWAYS DIRECT GROUNDING CONDUCTOR DOWN TO GROUNDING BAR.
3. GROUNDING KIT SHALL BE TYPE AND PART NUMBER AS SUPPLIED OR RECOMMENDED BY CABLE MANUFACTURER.
4. WEATHER PROOFING SHALL BE TYPE AND PART NUMBER AS SUPPLIED OR RECOMMENDED BY CABLE MANUFACTURER.
5. PROVIDE GROUNDING KIT 6' BEFORE TURN TRANSITION FROM TOWER TO ICE BRIDGE.
6. WHEN THE SCOPE OF WORK REQUIRES THE ADDITION OF A GROUNDING BAR TO AN EXISTING TOWER, THE SUBCONTRACTOR SHALL OBTAIN APPROVAL FROM THE TOWER OWNER PRIOR TO MOUNTING THE GROUNDING BARS TO THE TOWER.
7. EXTEND TWO (2) #2 AWG TINNED CU CONDUCTOR FROM BURIED GROUNDING RING AND CONNECT TO THE PROPOSED TOWER, FOLLOW MANUFACTURERS RECOMMENDATIONS FOR GROUNDING CONNECTIONS TO THE TOWER. (APPLICABLE TO NEW TOWERS ONLY.)
8. BUILDINGS AND/OR NEW TOWERS GREATER THAN 75 FEET IN HEIGHT AND THE MAIN GROUNDING CONDUCTORS ARE REQUIRED TO BE ROUTED TO GRADE, THE CONTRACTOR SHALL ROUTE TWO GROUNDING CONDUCTORS FROM THE ROOF-TOP, TOWERS, AND WATER TOWERS GROUNDING RING, TO THE EXISTING GROUNDING SYSTEM. THE GROUNDING CONDUCTORS SHALL NOT BE SMALLER THAN 2/0 AWG COPPER. ROOF-TOP GROUNDING RING SHALL BE BONDED TO THE EXISTING GROUNDING SYSTEM. THE BUILDING STEEL COLUMNS, LIGHTNING PROTECTION SYSTEM, AND BUILDING MAIN WATER LINE (FERROUS OR NONFERROUS METAL PIPING ONLY). SEE AT&T GROUNDING AND BONDING STANDARDS TP-76416 SPECIFICATION 6.5.2.2.
9. FLEX CONDUIT TO BE INSTALLED ON PROPOSED COPPER CONDUCTOR UP TO GROUNDING BAR AND, SEALED AT ENDS TO PROTECT FROM OUTSIDE MOISTURE AND DEBRIS.

GROUNDING NOTES | 8

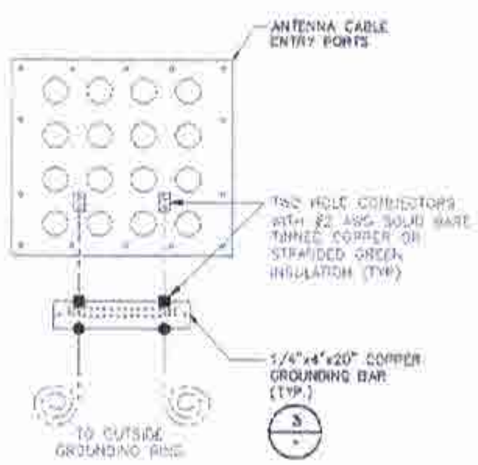

HATCHPLATE GROUNDING AT SHELTER | 9

NOT USED | 10

NOT USED | 11

NOT USED | 12

APPLICANT:

The NEW at&t

1452 EDINGER AVE., 3RD FLOOR
TUSTIN, CA 92780

ENGINEER:

Eukon
an SFC Communications, Inc. Company
65 POST SUITE 1000
IRVINE, CA 92618
TEL: (949) 553-8566
www.eukongroup.com

DRAWN BY:	AG
CHECKED BY:	AG

REVISIONS:

REV	DATE	DESCRIPTION
0	11/10/20	90% CONSTRUCTION DRAWING
A	11/03/20	90% CONSTRUCTION DRAWING

LICENSEE

DATE SIGNED: 11-19-20

PROJECT INFORMATION:

CSL04176
300 ALBIREO AVE.
LOMPOC, CA 93436

SHEET TITLE

GROUNDING DETAILS

SHEET NUMBER

G-3

NEWTON INSTRUMENT COMPANY, INC. BUTNER, N.C.			
NO	REQUIRED	PART NUMBER	DESCRIPTION
1	1	1/4"x4"x30"	SOLID GROUND BAR
2	2	A-606E	WALL MOUNTING BRACKET
3	2	3061-4	INSULATOR
4	4	3012-1	5/8"-11x1" HEX C.S.
5	4	3019-3	5/8" LOCKWASHER

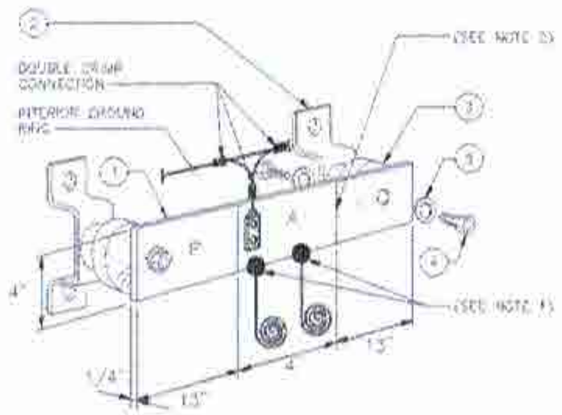

EACH GROUNDING CONDUCTOR TERMINATING ON ANY GROUND BAR SHALL HAVE AN IDENTIFICATION TAG ATTACHED AT EACH END THAT WILL IDENTIFY ITS ORIGIN AND DESTINATION

SECTION "P" – SURGE PROTECTORS

(CC) CELL REFERENCE GROUND BAR (IF COLLOCATED)
(CC) GENERATOR FRAMEWORK (IF AVAILABLE) (#2 AWG)
(CC) TELCO GROUND BAR (#2 AWG)
(CC) COMMERCIAL POWER COMMON NEUTRAL/GROUNDING BOND (3/0)
(CC) FIBER GROUND BAR (#2 AWG)
(CC) POWER ROOM REFERENCE GROUND BAR (#2 AWG)
(AT&T) RECTIFIER FRAMES

SECTION "A" – SURGE ABSORBERS

(EC) INTERIOR GROUND RING (#2 AWG)
(EC) EXTERNAL EARTH GROUNDING FIELD (BURIED GROUND RING) (#2 AWG)
(EC) METALLIC COLD WATER PIPE (IF AVAILABLE) (1/0 AWG)
(EC) BUILDING STEEL (IF AVAILABLE) (1/0 AWG)

SECTION "I" – ISOLATED GROUNDING ZONE

(AT&T) ALL ISOLATED GROUNDING REFERENCE
(AT&T) GROUND WINDOW BAR

(MGB) REFERENCE GROUNDING BAR | 1

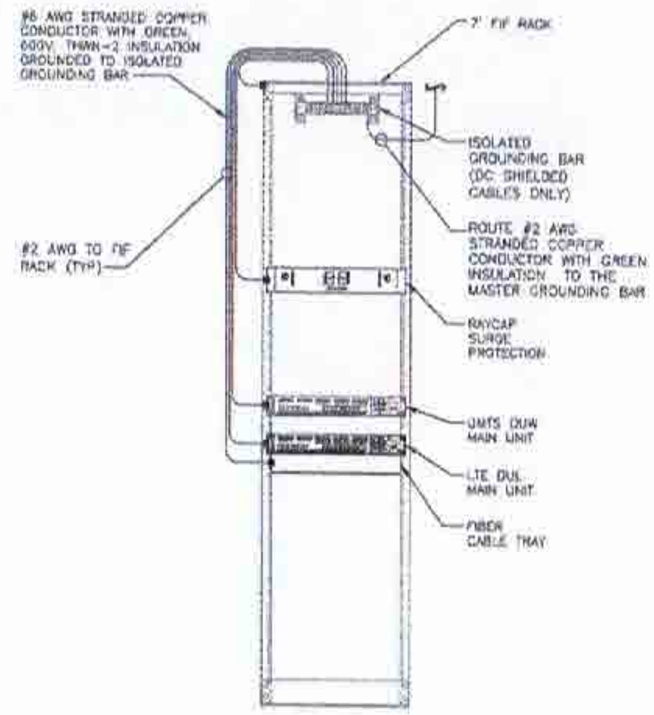

LTE RACK GROUNDING | 2

1. EXOTHERMIC WELD #2 AWG BARE TINNED SOLID COPPER CONDUCTOR TO GROUND BAR. ROUTE CONDUCTOR TO BURIED GROUND RING AND PROVIDE PARALLEL EXOTHERMIC WELD.
2. ALL GROUND BARS SHALL BE STAMPED IN TO THE METAL "IF STOLEN DO NOT RECYCLE" THE CONTRACTOR SHALL USE PERMANENT MARKER TO DRAW THE LINES BETWEEN EACH SECTION AND LABEL EACH SECTION ("P", "A", "I") WITH 1" HIGH LETTERS.
3. ALL HARDWARE SHALL BE STAINLESS STEEL 3/8" DIAMETER OR LARGER. ALL HARDWARE 18-8 STAINLESS STEEL INCLUDING LOCK WASHERS. COAT ALL SURFACES WITH AN ANTI-OXIDANT COMPOUND BEFORE MATING.
4. FOR GROUND BOND TO STEEL ONLY: INSERT A CADMIUM FLAT WASHER BETWEEN LUG AND STEEL. COAT ALL SURFACES WITH AN ANTI-OXIDANT COMPOUND BEFORE MATING.
5. DO NOT INSTALL CABLE GROUND KIT AT A BEND AND ALWAYS DIRECT GROUNDING CONDUCTOR DOWN TO GROUNDING BUS.
6. NUT & WASHER SHALL BE PLACED ON THE FRONT SIDE OF THE GROUND BAR AND BOLTED ON THE BACK SIDE. INSTALL BLACK HEAT-SHRINKING TUBE, 600 VOLT INSULATION, ON ALL GROUNDING TERMINATIONS. THE INTENT IS TO WEATHERPROOF THE COMPRESSION CONNECTION.
7. SUPPLIED AND INSTALLED BY CONTRACTOR.
8. THE CONTRACTOR SHALL BE RESPONSIBLE FOR INSTALLING ADDITIONAL GROUND BARS AS REQUIRED, PROVIDING 50% SPARE CONNECTION POINTS.
9. ENSURE THE WIRE INSULATION TERMINATION IS WITHIN 1/8" OF THE BARREL (NO BINDERS).

NOTES | 3

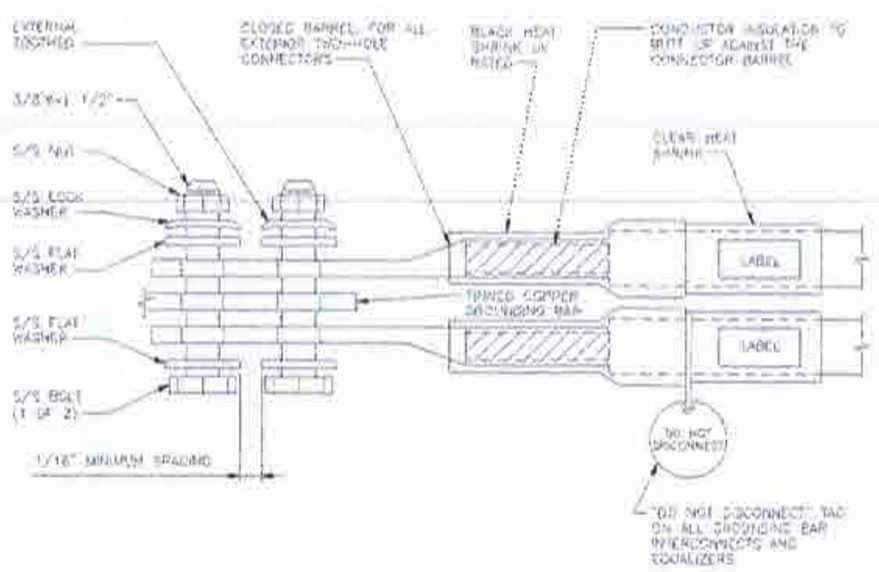

EXTERIOR TWO HOLE LUG DETAIL | 4

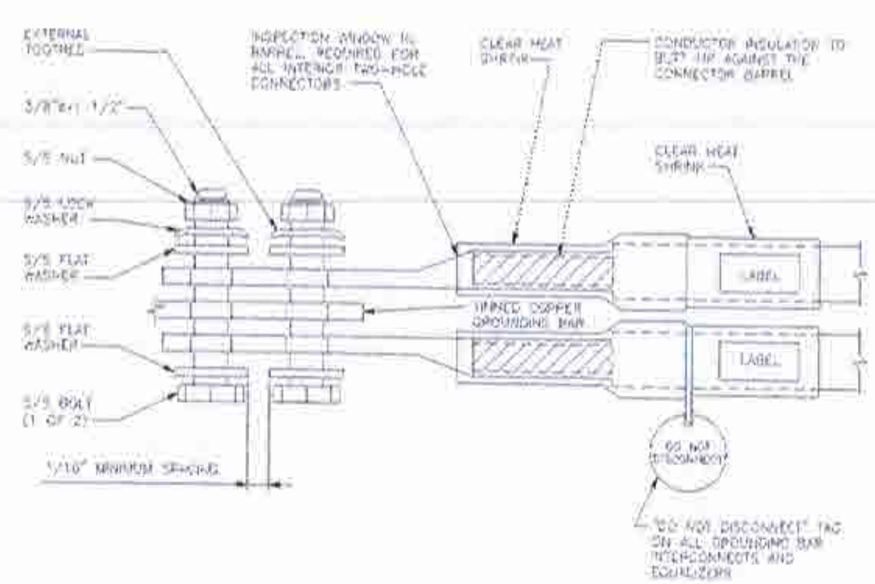

INTERIOR TWO HOLE LUG DETAIL | 5

APPLICANT

The NEW at&t
1452 EDINGER AVE., 3RD FLOOR
TUSTIN, CA 92780

ENGINEER

Eukon
an SFC Communications, Inc. Company
65 POST, SUITE 1000
IRVINE, CA 92618
TEL (949) 553-8565
www.eukongroup.com

DRAWN BY:	AG
CHECKED BY:	AG

REVISIONS

REV	DATE	DESCRIPTION
0	11/10/20	100% CONSTRUCTION DRAWING
A	11/03/20	90% CONSTRUCTION DRAWING

LICENSEE

DATE SIGNED: 11-19-20

PROJECT INFORMATION

CSL04176
300 ALBIREO AVE.
LOMPOC, CA 93436

SHEET TITLE

GROUNDING DETAILS

SHEET NUMBER

G-4

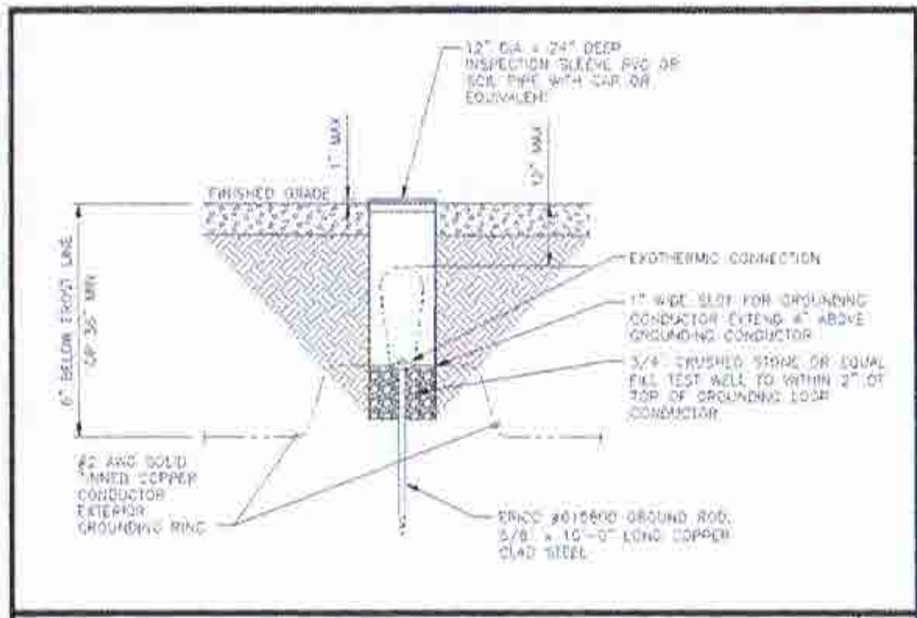

TEST GROUND ROD WITH INSPECTION SLEEVE | 1

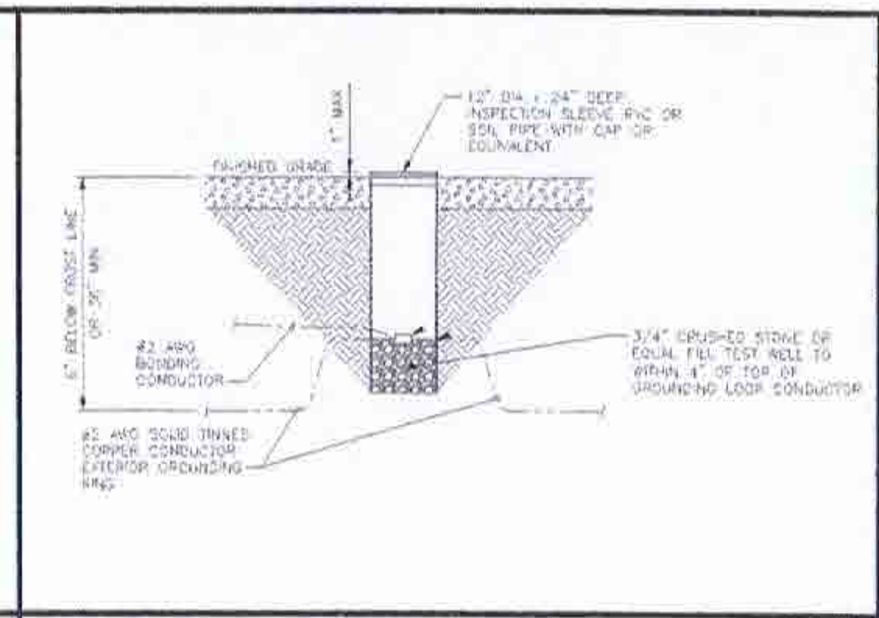

EXOTHERMIC WITH INSPECTION SLEEVE | 2

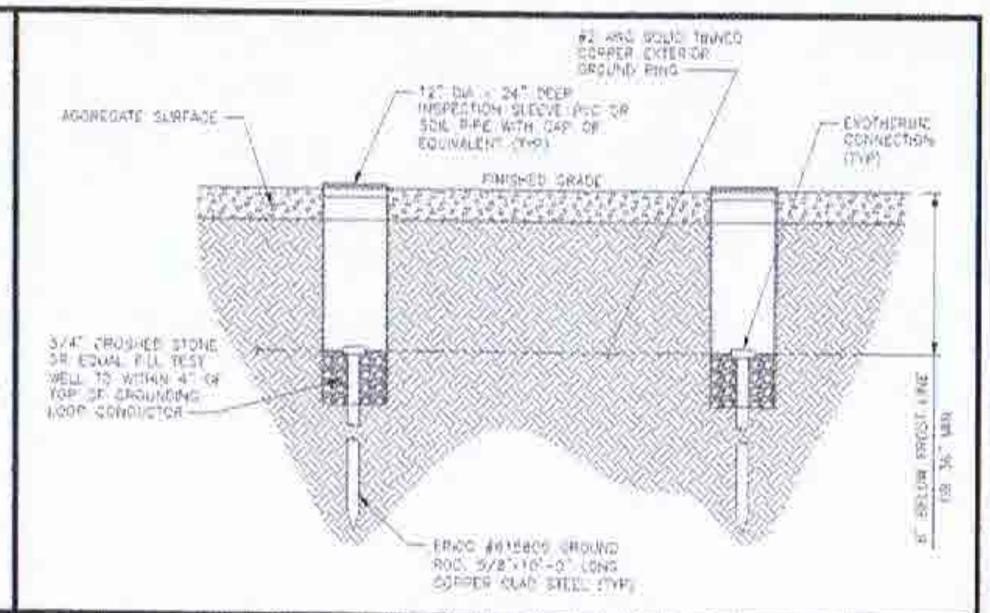

GROUNDING ROD WITH INSPECTION SLEEVE | 3

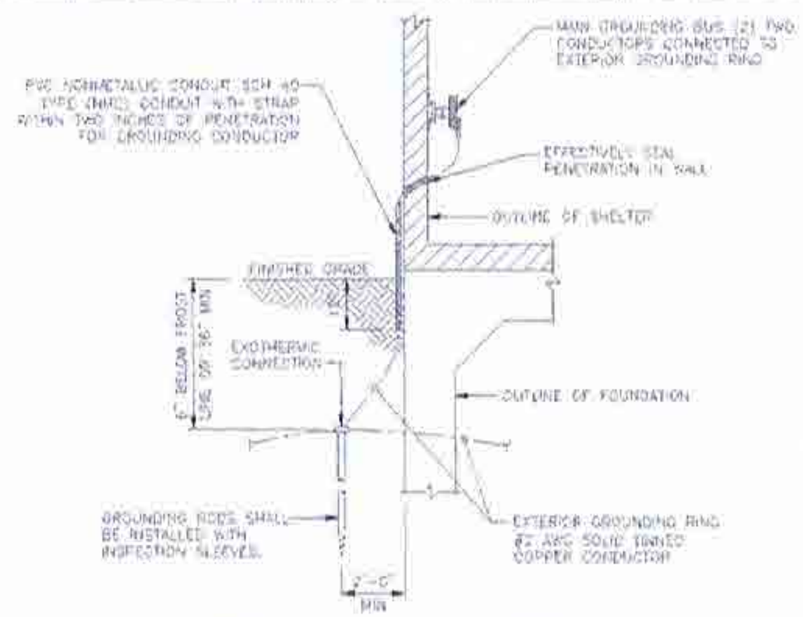

BUILDING GROUNDING | 4

NOT USED | 5

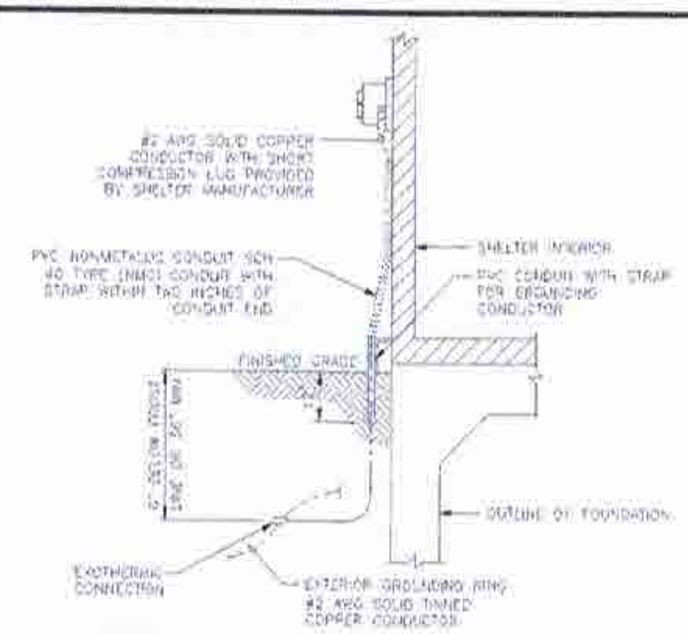

EXTERIOR RECEPTACLE GROUNDING | 6

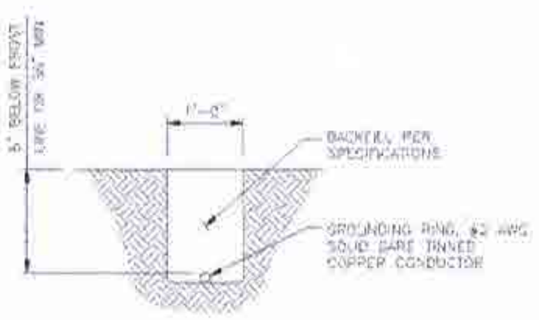

GROUND RING TRENCH | 7

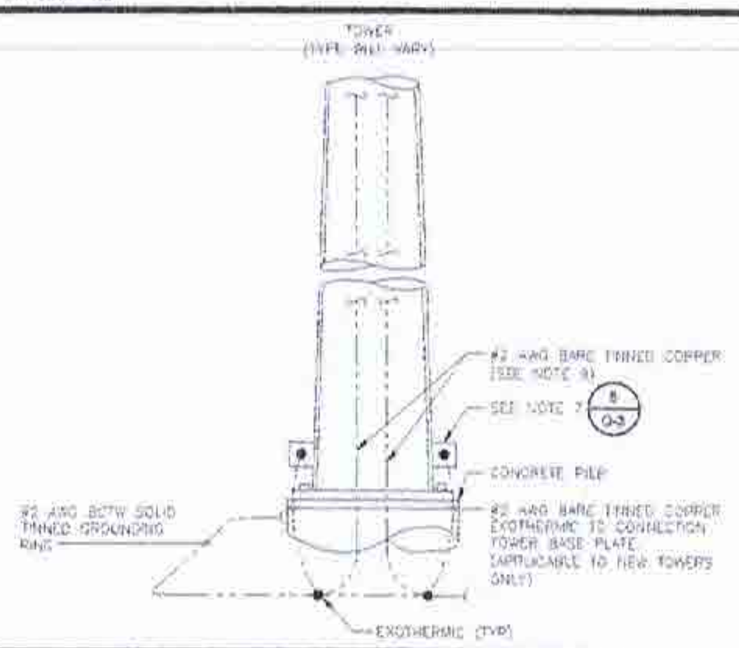

TOWER AND ANTENNA CABLE GROUNDING | 8

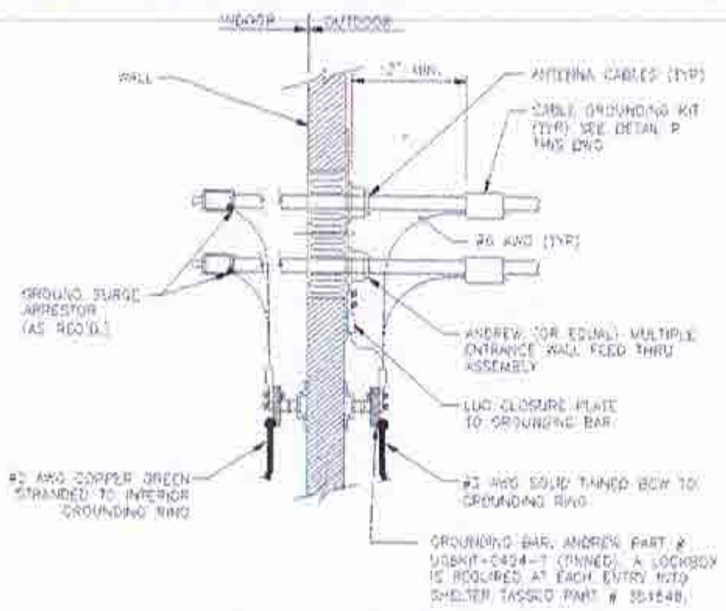

HATCHPLATE GROUNDING BAR AND FEEF THRU WALL ASSEMBLY | 9

APPLICANT:

The NEW at&t

1452 EDINGER AVE., 3RD FLOOR
TUSTIN, CA 92780

ENGINEER:

Eukon
an EPC Communications, Inc. Company
65 POST, SUITE 1000
IRVINE, CA 92618
TEL: (949) 553-8566
www.eukongroup.com

DRAWN BY:	AC
CHECKED BY:	AC

REVISIONS:

REV	DATE	DESCRIPTION
B	11/10/20	100% CONSTRUCTION DRAWING
A	11/03/20	90% CONSTRUCTION DRAWING

LICENSEE:

DATE SIGNED 11-19-20

PROJECT INFORMATION:

CSL04176
300 ALBIREO AVE.
LOMPOC, CA 93436

SHEET TITLE:

GROUNDING DETAILS

SHEET NUMBER:

G-5

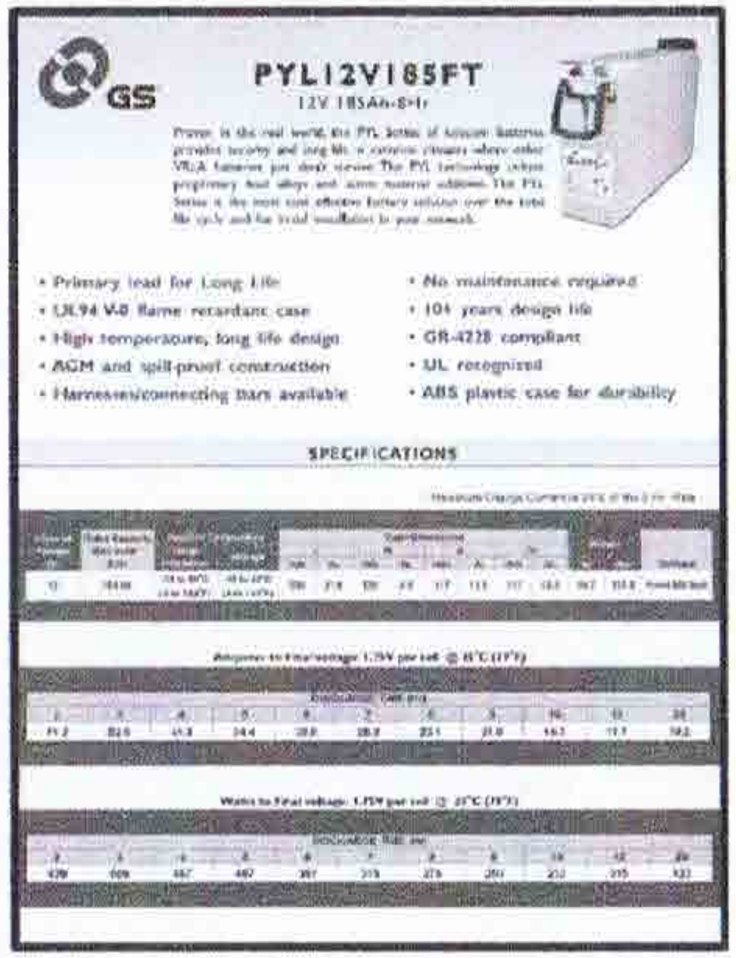

GS

PYL12V185FT

12V 185Ah-8Hr

Power is the real world, the PYL series of Lithium batteries provides security and long life in extreme climates where other VRLA batteries just don't survive. The PYL technology utilizes proprietary lead alloys and active material additives. The PYL series is the most cost effective battery solution over the total life cycle and the total installation in your network.

- Primary lead for Long Life
- UL94 V-0 flame retardant case
- High temperature, long life design
- AGM and spill-proof construction
- Harness/connecting bars available
- No maintenance required
- 10+ years design life
- GR-4228 compliant
- UL recognized
- ABS plastic case for durability

SPECIFICATIONS

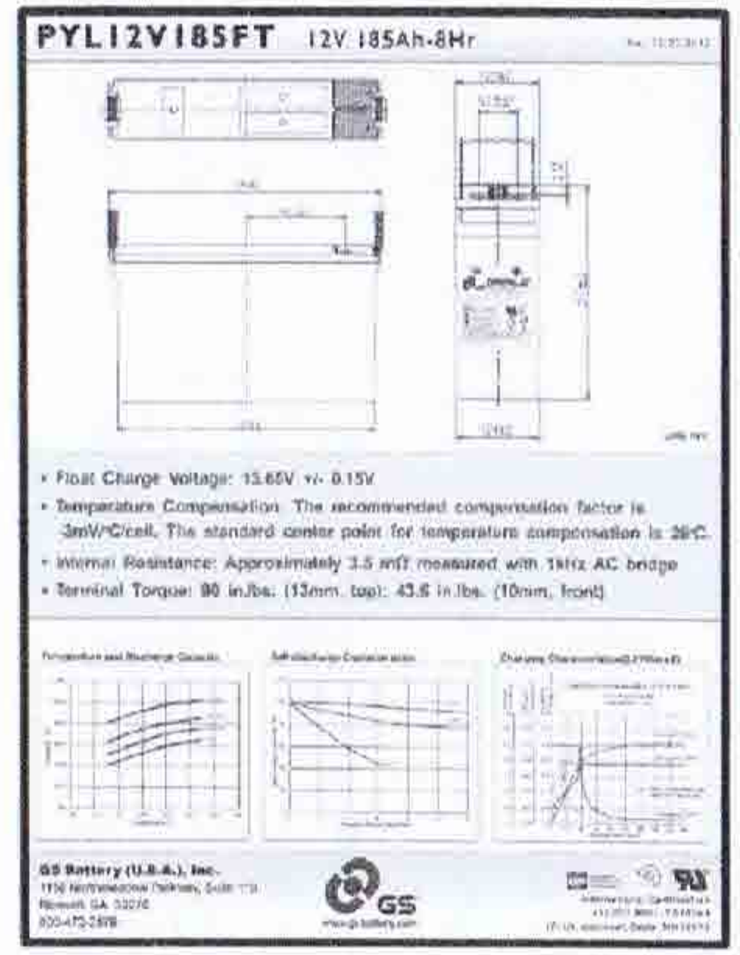

PYL12V185FT 12V 185Ah-8Hr

- Float Charge Voltage: 13.65V +/- 0.15V
- Temperature Compensation: The recommended compensation factor is -3mV/°C/cell. The standard center point for temperature compensation is 25°C.
- Internal Resistance: Approximately 3.5 mΩ measured with 1kHz AC bridge
- Terminal Torque: 90 in.lbs. (13mm. top); 43.6 in.lbs. (10mm. front)

GS Battery (U.S.A.), Inc.
1150 Northbrook Parkway, Suite 115
Norcross GA 30092
800-472-2578

www.gs-battery.com

FIRE DEPARTMENT NOTES

GENERAL

1.0 ADDRESS NUMBERS:

A. APPROVED ADDRESS NUMBERS, BUILDING NUMBERS OR APPROVED BUILDING IDENTIFICATION SHALL BE PLACED IN A POSITION THAT IS CLEARLY LEGIBLE AND VISIBLE FROM THE STREET, ROAD, ALLEY, AND RUNWAYS HAVING ACCESS TO AND WITHIN THE PROPERTY.

2.0 FIRE EXTINGUISHERS:

A. PROVIDE A FIRE EXTINGUISHER (MINIMUM 2A-10BC) WITHIN A RECESSED OR SEMI-RECESSED CABINET WITHIN 75 FEET TRAVEL DISTANCE FROM ALL POINTS IN THE OCCUPANCY. THE EXTINGUISHER SHALL BE MOUNTED ON A HOOK WITHIN THE CABINET. (ELEVATED OFF CABINET FLOOR). THE TOP OF THE EXTINGUISHER SHALL BE NO HIGHER THAN 48 INCHES (1219 mm) ABOVE THE FLOOR. EXTINGUISHER SHALL BE PLACED IN A EASILY ACCESSIBLE LOCATIONS WHERE THEY WILL BE READILY ACCESSIBLE AND IMMEDIATELY AVAILABLE FOR USE.

3.0 DOOR OPERATIONS:

A. ALL EXIT DOORS SHALL BE OPENABLE FROM THE INSIDE WITHOUT USE OF A KEY OR SPECIAL KNOWLEDGE OR EFFORT. THE OPERATION OF ANY EXIT DOOR SHALL NOT REQUIRE MORE THAN ONE OPERATION.

4.0 ADDITIONAL PERMIT:

A. PRIOR TO THE FINAL INSPECTION, OBTAIN A HAZARDOUS MATERIALS PERMIT FROM THE FIRE DEPARTMENT. CONTACT THE ENVIRONMENTAL MANAGEMENT CENTER AT (916) 405-8300.

5.0 REQUIRED INSPECTIONS:

A. THE FIRE DEPARTMENT INSPECTION FOR THIS PROJECT INCLUDE THE FOLLOWING:

1. HAZARDOUS MATERIALS FINAL INSPECTION.
2. FIRE PREVENTION BUREAU FINAL INSPECTION - CONTRACTOR MUST REQUEST A SEPERATE INSPECTION. INSPECTION INCLUDES, BUT IS NOT LIMITED TO: FIRE EXTINGUISHERS, SIGNAGE, DOOR HARDWARE AND MEANS OF EGRESS. EMERGENCY/EXIT LIGHTING, ETC.

NOTE: TO SCHEDULE INSPECTIONS: CALL OFFICE OF STATE FIRE MARSHALL AT (916)-445-8200, AT LEAST 48 HOURS IN ADVANCE.

NOTES

1. PER CFC 2019 SECTION 1206.2 "STATIONARY STORAGE BATTERY SYSTEMS HAVING CAPACITIES EXCEEDING THE VALUES SHOWN IN TABLE 1206.2 SHALL COMPLY WITH SECTION 1206.2.1 THROUGH 1206.2.12.8, AS APPLICABLE". SINCE THE TOTAL CAPACITY OF THE LEAD-ACID-TYPE BATTERY SYSTEM IS LESS THAN 70KWH THIS MODIFICATION IS EXEMPT FROM CFC 2019 SECTION 1206 CAPACITY CALCULATION.

   (8 BATTERIES × 185AH × 12V) / 1000 = 17.76kWh

2. DEFINITIONS PER CFC 2019 SECTION 1202.1:

   LEAD ACID BATTERY
   A STORAGE BATTERY THAT IS COMPRISED OF LEAD ELECTRODES IMMERSED IN SULPHURIC ACID ELECTROLYTE.

   CORROSIVE
   A CHEMICAL THAT CAUSES VISIBLE DESTRUCTION OF, OR IRREVERSIBLE ALTERATIONS IN, LIVING TISSUE BY CHEMICAL ACTION AT THE POINT OF CONTACT. A CHEMICAL SHALL BE CONSIDERED CORROSIVE IF, WHEN TESTED ON THE INTACT SKIN OF ALBINO RABBITS BY THE METHOD DESCRIBED IN DOTR 49 CFR 173.137, SUCH CHEMICAL DESTROYS OR CHANGES IRREVERSIBLY THE STRUCTURE OF THE TISSUE AT THE POINT OF CONTACT FOLLOWING AN EXPOSURE PERIOD OF 4 HOURS. THIS TERM DOES NOT REFER TO ACIDS OR BASIMATE SURFACES.

   HAZARDOUS MATERIALS
   THOSE CHEMICALS OR SUBSTANCES WHICH ARE PHYSICAL HAZARDS OR HEALTH HAZARDS AS DEFINED AND CLASSIFIED IN THIS CHAPTER, WHETHER THE MATERIALS ARE IN USABLE OR WASTE CONDITION.

   HEALTH HAZARD
   A CLASSIFICATION OF A CHEMICAL FOR WHICH THERE IS STATISTICALLY SIGNIFICANT EVIDENCE THAT ACUTE OR CHRONIC HEALTH EFFECTS ARE CAPABLE OF OCCURRING IN EXPOSED PERSONS. THE TERM "HEALTH HAZARD" INCLUDES CHEMICALS THAT ARE TOXIC, HIGHLY TOXIC AND CORROSIVE.

   PHYSICAL HAZARD
   A CHEMICAL FOR WHICH THERE IS EVIDENCE THAT IT IS A COMBUSTIBLE LIQUID, CRYOGENIC FLUID, EXPLOSIVE, FLAMMABLE (SOLID, LIQUID OR GAS), OXIDANT, PEROXIDE (SOLID OR LIQUID), OXIDIZER (SOLID OR LIQUID), OXIDIZING GAS, PYROPHORIC (SOLID, LIQUID OR GAS), UNSTABLE (REACTIVE) MATERIAL (SOLID, LIQUID OR GAS) OR WATER-REACTIVE MATERIAL (SOLID OR LIQUID).

BATTERY TYPE	ELECTROLYTE WEIGHT (lbs.)	ELECTROLYTE VOLUME (gal.)	ACID WEIGHT (lbs.)	ACID VOLUME (gal.)	LEAD (lbs.)	LEAD OXIDE (lbs.)	TOTAL # OF BATTERIES	ELECTROLYTE TOTAL WEIGHT (lbs.)	ELECTROLYTE TOTAL VOLUME (gal.)	TOTAL ACID (gal.)
* MARATHON "M12V180FT"	27.27	2.47	11.44	0.74	92.8	22	8	218.16	19.76	5.92

APPLICANT:

The NEW at&t

1452 EDINGER AVE., 3RD FLOOR
TUSTIN, CA 92780

ENGINEER:

Eukon
an SFC Communications, Inc. Company
65 POST, SUITE 1000
IRVINE, CA 92618
TEL: (949) 553-8566
www.eukongroup.com

DRAWN BY:	AC
CHECKED BY:	AC

REVISIONS:

REV.	DATE	DESCRIPTION
0	11/10/20	100% CONSTRUCTION DRAWING
A	11/23/20	90% CONSTRUCTION DRAWING

LICENSEE:

DATE SIGNED: 11-19-20

PROJECT INFORMATION:

CSL04176
300 ALBIREO AVE.
LOMPOC, CA 93436

SHEET TITLE:

BATTERY INFORMATION

SHEET NUMBER:

FD-1

NOTES:

1. UTILITY DESIGN AND RUNS ARE PRELIMINARY, PENDING FINAL DESIGN FROM UTILITY PROVIDERS.
2. NO FIBER SERVICE IN AREA. FIBER P.O.C. TO BE DETERMINED

FOR NATIVE PLANTINGS:

USE ONLY FERTILIZERS AND AMENDMENTS RECOMMENDED BY THE NURSERY WHERE THE NATIVE PLANTS ARE OBTAINED. ADD MYCORRHIZAE TO THE BACKFILL IF RECOMMENDED. BACKFILL PLANTS WITH THE SAME SOIL REMOVED FROM THE HOLE. IT IS IMPORTANT TO MAINTAIN ANY BENEFICIAL ORGANISMS, MYCORRHIZAE AND HUMUS THAT ALREADY EXIST IN THE SOIL.

CONTRACTOR SHALL PROTECT ANY EXISTING LANDSCAPE AND HARDSCAPE FROM DAMAGE DURING CONSTRUCTION. ANY AREAS DAMAGED MUST BE RETURNED TO THEIR ORIGINAL CONDITION AFTER CONSTRUCTION OPERATIONS.

ARCHITECT OR DEVELOPER SHALL PERFORM AN AGRONOMICAL SOILS TEST FOR FERTILITY AND TO DETERMINE DRAINAGE CAPABILITY. FOLLOW THE LAB SPECIFICATIONS DURING PLANTING. LAB SHALL BE INDEPENDENT FROM THE AMENDMENT SUPPLIER. ORGANIC AMENDMENTS SHALL BE USED. PROOF OF AMENDMENTS USED SHALL BE PROVIDED TO THE CLIENT.

PLANTING LEGEND

TREES

SYMBOL	KEY	BOTANICAL/ COMMON NAME	REMARKS	SIZE	QTY.	CYL/SPAC	NATIVE CONTINUUM	MAINTAIN TO HAT	HOSE BY REQUIRED
	QUE AGR	QUERCUS AGRIFOLIA COAST LIVE OAK	MULTI OR LOW BRANCH, ONLY PRUNE TO REMOVE DEFECTS	24" BOX	2	ABC L-3	40'x50'+	SAME	4-L

SHRUBS

SYMBOL	KEY	BOTANICAL/ COMMON NAME	REMARKS	SIZE	QTY.	CYL/SPAC	NATIVE CONT.	HOSE BY REQUIRED
	HET ARB	HETEROMELES ARBUTIFOLIA TOYON		5 GAL	3	AB L-3	12'x8'+	4-L
	FRA MOU	FRANGULA (RHAMNUS) 'MOUND SAN BRUNO' SAN BRUNO COFFEEBERRY		5 GAL	7	AB L-3	5'x10'+	4-L

MAINTAIN 3" MIN. DEEP MULCH TO THE DRIPLINE OF THE TREES/ SHRUBS THROUGHOUT THE LIFE OF THE PLANTINGS. - USE PARTIALLY COMPOSTED, NITROGEN STABILIZED TREE REMAINS, 0-2 INCH SCREENED COMPOST OR PRE- APPROVED EQUAL.

QTY	SIZE	KEY
15	1 GAL	CEA NOR
10	1 GAL	
30	5 GAL	

TREE PROTECTION NOTES

A. EXISTING TREES SHALL BE IDENTIFIED AND PRESERVED WITH PROTECTIVE FENCING TO FORM A TREE PROTECTION ZONE (TPZ). THIS AREA ENCIRCLES TREE AT THE EDGE OF THE DRIPLINE AND PROTECTS THE ROOTS IN THE TOP 24" OF SOIL.

B. PROTECTIVE FENCING SHALL BE INSTALLED PRIOR TO EARTHWORK AND UNTIL WORK IS COMPLETE. FENCING SHALL BE 4-6 FEET HIGH, INSTALLED 6' OUTSIDE THE DRIPLINE. THE TEMPORARY FENCING SHALL BE SAFETY ORANGE COLOR, PLASTIC MESHING OR CHAINLINK FENCING SUPPORTED BY STEEL POSTS OR T-STAKES AT 8'O.C. MAXIMUM.

C. NO CONSTRUCTION ACTIVITIES, STAGING EQUIPMENT OR STORAGE AND STOCKPILING IS ALLOWED WITHIN THE TPZ.

D. NO DISPOSAL OF CONSTRUCTION MATERIALS OR BYPRODUCTS INCLUDING BUT NOT LIMITED TO PAINT AND CHEMICAL SOLUTIONS AND NO EQUIPMENT WASHING RUN-OFF OR REFUELING IS ALLOWED AROUND OR WITHIN THE TPZ.

E. THE NATURAL OR PRE-CONSTRUCTION GRADE SHALL BE MAINTAINED WITHIN THE TPZ. AT NO TIME SHALL SOIL BE IN CONTACT WITH THE TREE TRUNK ABOVE THE ROOT PLANE.

F. THE PROTECTION ZONE SHALL BE IRRIGATED SUFFICIENTLY WITH CLEAN POTABLE WATER TO KEEP THE TREE IN GOOD HEALTH AND VIGOR BEFORE, DURING AND AFTER CONSTRUCTION. DEEP WATERING MAY BE NECESSARY ON A WEEKLY BASIS.

DO NOT WATER EXISTING NATURALIZED OAKS. CONTACT AN ARBORIST, FOLLOW THEIR ADVICE.

G. WORK CONDUCTED IN THE GROUND WITHIN THE TPZ SHALL BE ACCOMPLISHED WITH HAND TOOLS OR AIR SPADE.

H. AVOID CUTTING ROOTS LARGER THAN 1" IN DIAMETER. CUTS SHOULD BE CLEAN AND MADE AT RIGHT ANGLES TO THE ROOTS. WHEN PRACTICAL, CUT ROOTS BACK TO A BRANCHING LATERAL ROOT. TRENCHES FOR PIPING SHALL BE BORED UNDER AT A MAXIMUM OF 24" DEEP. CONSULT A CERTIFIED ARBORIST TO BE PRESENT IF MORE THAN 1/5 OF THE ROOT ZONE IS IMPACTED OR ROOTS GREATER THAN 2" WITHIN 5' OF THE TRUNK WILL BE CUT, TO BE SURE OF TREE STABILITY AND THAT TREE HEALTH WILL NOT BE AFFECTED.

I. VERIFY IF PRUNING FOR CLEARANCE IS NEEDED TO PREVENT DAMAGING BRANCHES WITH LARGE EQUIPMENT. ALL PRUNING SHALL BE IN ACCORDANCE WITH INDUSTRY STANDARDS AND UNDER THE DIRECTION OF A CERTIFIED ARBORIST.

J. TREES TO BE RE-LOCATED THAT DO NOT SURVIVE SHALL BE REPLACED WITH A 24" BOX TREE OF THE SAME GENUS AND SPECIES OR AS APPROVED BY THE CITY.

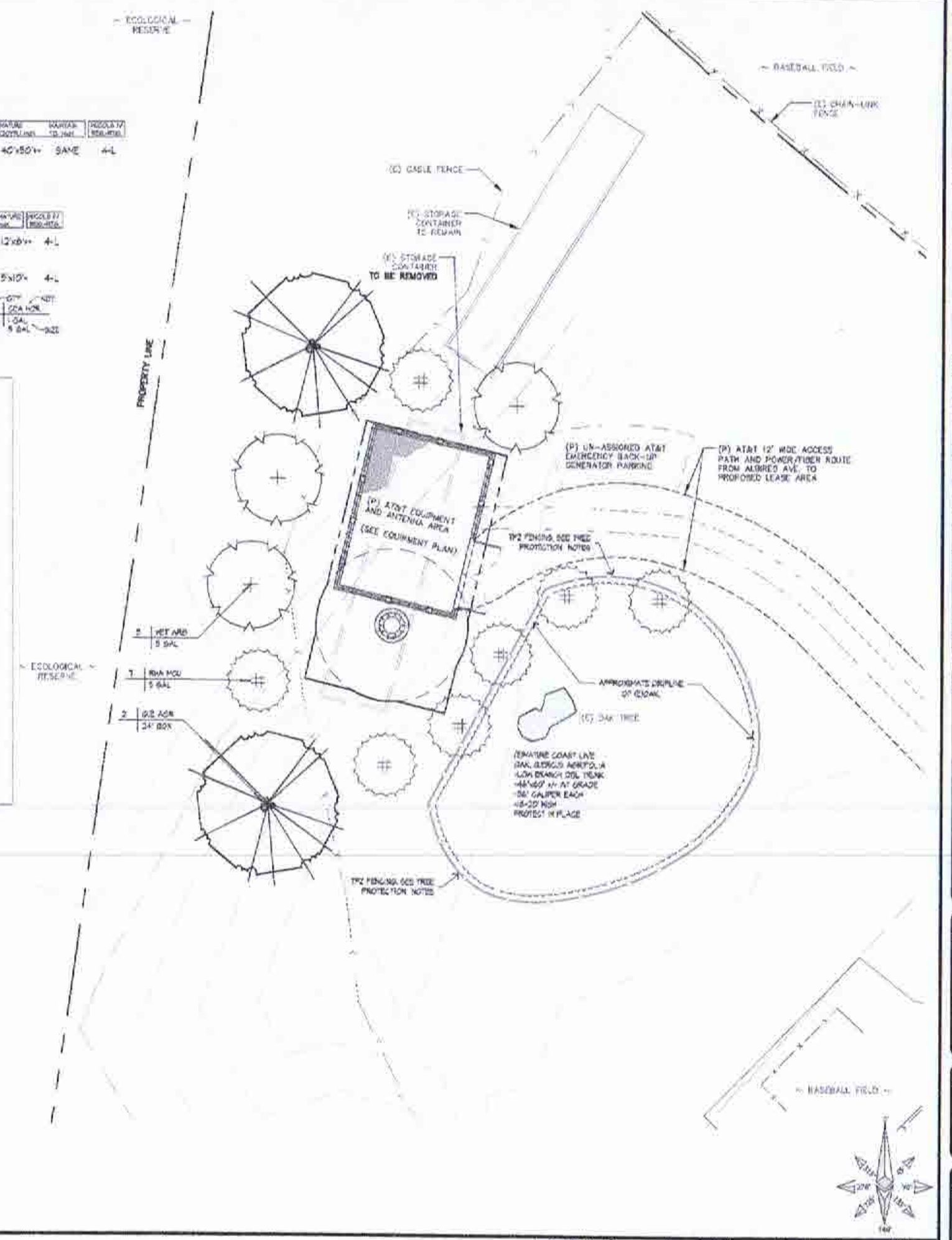

SITE PLAN

SCALE 1/8"=1'-0"

1

APPLICANT

The NEW at&t

1452 EDINGER AVE., 3RD FLOOR
TUSTIN, CA 92780

ENGINEER:

Eukon
an SFC Communications, Inc. Company
65 POST, SUITE 1000
IRVINE, CA 92618
TEL: (949) 553-8666
www.eukongroup.com

DRAWN BY:	HT/MP/AS
CHECKED BY:	TB/AC

REVISIONS

REV	DATE	DESCRIPTION
C	11/13/18	100% ZONING DRAWING
A	11/09/18	90% ZONING DRAWING

LICENSER

DMLA
Landscape Architecture
30012 Alicante Dr., Dana Point, Ca 92629
davidl@dmlaonline.com
(949) 366-3319

PROJECT INFORMATION

CSL04176
300 ALBIREO AVE.
LOMPOC, CA 93436

SHEET TITLE

PLANTING PLAN

SHEET NUMBER

L-1

CONTRACTOR SHALL CAP, DIVERT AND/OR ADJUST ANY EXISTING IRRIGATION SYSTEM TO ACCOMMODATE THE NEW PLANTINGS. ENOUGH WATER MUST BE APPLIED TO THE EXISTING PLANTINGS DURING AND AFTER CONSTRUCTION OPERATIONS TO INSURE PLANT SURVIVAL.

CONTRACTOR SHALL BE RESPONSIBLE FOR MONITORING AND REGULATING SOIL MOISTURE CONTENT AND DRAINAGE UNTIL THE END OF CONTRACTED MAINTENANCE RESPONSIBILITY.

GENERAL WATERING GUIDELINE AS FOLLOWS:
WARM WEATHER- FILL BASIN 2X/ WEEK
COOL WEATHER- FILL BASIN 1X/ WEEK

CONTRACTOR SHALL CHECK SOIL MOISTURE AT LEAST WEEKLY WITH MOISTURE PROBE. SAMPLE THE ROOTBALL AND SURROUNDING SOIL. SOIL SHOULD BE MOIST THROUGHOUT THE SOIL PROFILE.
THE ROOTBALL MUST NOT BE ALLOWED TO DRY OUT OR BE ALLOWED TO SIT IN STANDING WATER- EVER.
ADJUST WATERING SCHEDULE BASED UPON RESULTS

IRRIGATION LEGEND

EQUIPMENT

SYMBOL	DESCRIPTION	REMARKS	DETAIL
WM	(E) WATER METER AND SERVICE LINE. VERIFY THE EQUIPMENT'S LOCATION (E/O) AND CONDITION - REPAIR/REPLACE AS NECESSARY PER THE DIRECTION OF THE OAR (OWNER'S AUTHORIZED REPRESENTATIVES)	---	---
DCDA	(E) BACKFLOW PREVENTER. LOCATE - THEN TAP INTO MAINLINE AFTER BACKFLOW. VERIFY THE EQUIPMENT'S LOCATION, SIZE AND CONDITION - REPAIR/REPLACE AS NECESSARY PER THE DIRECTION OF THE OAR (OWNER'S AUTHORIZED REPRESENTATIVES)	---	---
C	RAINBIRD ESP-4DM 4 STATION CONTROLLER IN LOCKING WALL MOUNT BOX. PROVIDE AND INSTALL WEATHER SENSOR PER MANUFACTURER. SENSOR TO HAVE CLEAR VIEW OF SKY	D	L-4
MV	NIBCO T-580-70 BALL VALVE (LINE SIZE)	E	L-4
GPM	RAIN BIRD XCZ-PRO SERIES CONTROL ZONE ASSEMBLY WITH REMOTE CONTROL, LOW FLOW DVF VALVES AND PRESSURE REGULATING FILTER. INSTALL IN SHRUB BEDS WHENEVER POSSIBLE IN RECTANGULAR VALVE BOX	F	L-4
FH	FLUSH HYDRANT-INSTALL AT LEAST ONCE AT EACH SYSTEM VALVE AT ENDS OF LINES AND FARTHEST FROM SOURCE. PLACE IN ROUND LOCKING VALVE BOX WITH GRAVEL AND EXTRA LENGTH OF BLANK TUBING	L	L-4
AVR	RAINBIRD ARV050 1/2" AIR RELIEF VALVE-INSTALL ONE AT EACH SYSTEM VALVE AT HIGH POINT(S) IN ROUND LOCKING VALVE BOX WITH GRAVEL	K	L-4
———	(E) PVC WATER PIPE CL. 315 OR SCH. 40	AB	L-4
— —	UV RESISTANT PVC MAINLINE WATER PIPE. USE CLASS 315 AND LARGER OR SCH. 40 1-1/2" AND SMALLER - BASINS OR EQUAL. STAKE IN REBAR 12" HOOK @36"O.C. AND BOTH SIDES OF ALL CHANGES IN DIRECTION. COVER IN MULCH TYP.	AB	L-4
———	UV RESISTANT PVC LATERAL WATER PIPE. USE SCH.40 (3/4" to 1-1/2") - BRASWELL OR EQUAL. STAKE IN #3 REBAR 12" HOOK @36"O.C. AND BOTH SIDES OF ALL CHANGES IN DIRECTION. ON-GRADE. COVER IN MULCH TYP.	AB	L-4
———	POLY PIPE 1/2" - 3/4" UV RESISTANT FLEXIBLE LATERALS - RAINBIRD-XFD BLACK STRIPE TUBING. STAKE @36" O.C. AND BOTH SIDES OF ALL CHANGES IN DIRECTION WITH RAINBIRD TOS-050 W/ BEND. COVER W/ MULCH TYP.	AB	L-4
———	BURIED SLEEVES SCH.40 PVC PIPE - ABOVE GRADE SLEEVES GALVANIZED PIPE. SIZE PER PLAN OR 2X DIA OF PIPE/ WIRE BUNDLE AND 3" MIN. SIZE. INSTALL WHERE SHOWN AND ALL STREET OR DRIVE CROSSINGS. STAKE ENDS/ALL SLEEVES CROSSING DIRT ROADS W/ #3 REBAR W/ HOOK AT EACH END- KEEP STAKES OUT OF ROAD. EXTEND SLEEVES PAST EDGE TYP.	AB	L-4

ALL ON-GRADE UV RESISTANT PIPING MUST BE STAKED. STAKE PVC W/ #3 REBAR 12" HOOKS @36"O.C. AND BOTH SIDES OF ALL CHANGES IN DIRECTION. STAKE POLY PIPE WITH MANUFACTURERS RECOMMENDED STAKE AND LOCATION, COVER W/ MULCH TYP.

SPRINKLER HEADS

SYMBOL	DESCRIPTION	DISCHARGE GPM	PSI	RADIUS	PRECIP RATE	DETAIL
	EXPLORE RAINBIRD XFD-06-12 W/ 6 GPH DRIPPERS AT 2' INTERVAL WITH 60% SPACING OF 12-18" O.C. INSTALL INTO SOIL AND COVER W/ MULCH TYP. THE SYMBOL REPRESENTS AREA WATERED (NOT THE EXACT LAYOUT) - INSTALL WITH AIR RELIEF AND FLUSH VALVES PER MFG.		15 PSI MIN			1J L-4

ANTI-DRAIN CHECK VALVED (ADV) SHALL BE INSTALLED AT ANY WATER OUTLET SUFFERING LOW HEAD DRAINAGE - FOR SPRINKLERS USE RAINBIRD SAN2, HUNTER HOY 50M-SCP OR VALCOR V9000 SERIES

VALVE #
AD
GPM
VALVE SIZE

POINT OF CONNECTION AND CONTROLLER INSTALLATION

POC — POINT OF CONNECTION TO THE (E) EXISTING POTABLE WATER METER. VERIFY THE EXACT STUBOUT LOCATION FOR THE DRAWINGS AND ACTUAL FIELD CONDITIONS. THE LANDSCAPE CONTRACTOR SHALL PAY FOR ALL FEES AND PERMITS AND COORDINATE WITH THE WATER AGENCY FOR THE INSTALLATION OF THE IRRIGATION SYSTEM. PROVIDE ALL REQUIRED FITTINGS TO COMPLETE THE TASK. THE CONTRACTOR SHALL RUN A 1" PVC SCH40 MAINLINE PIPE FROM THE POC TAP/ STUBOUT LOCATION TO THE GATE VALVE, REMOTE CONTROL VALVE, THEN ATMOSPHERIC BACKFLOW PREVENTION DEVICE. FINAL LOCATION OF THIS EQUIPMENT SHALL BE APPROVED BY THE OAR (OWNER'S AUTHORIZED REPRESENTATIVE). THE SYSTEM HAS BEEN DESIGNED FOR A MAXIMUM FLOW OF 8.0 GPM AT MINIMUM OPERATING PRESSURE OF 40.0 PSI. THE CONTRACTOR SHALL VERIFY THE STATIC PRESSURE AT THE SITE BEFORE COMMENCEMENT OF THE PROJECT.

CNTRL — PROVIDE AND INSTALL CONTROLLER ASSEMBLY PER ALL STATE AND LOCAL CODES. FINAL LOCATION TO BE APPROVED BY THE OWNER'S AUTHORIZED REPRESENTATIVE. 120VAC POWER PROVIDED BY OWNER. THE LANDSCAPE CONTRACTOR SHALL COORDINATE THE 120VAC POWER FROM THE SOURCE TO THE CONTROLLER LOCATION AND MAKE THE FINAL HOOKUP. ALL 120VAC POWER WIRING SHALL BE COMPLETED BY A LICENSED ELECTRICAL CONTRACTOR. THE LANDSCAPE CONTRACTOR SHALL CONNECT THE LOW VOLTAGE CONTROL WIRES TO THE CONTROLLER TERMINAL STRIP IN SEQUENCE PER THE DRAWING. ANY DEVIATIONS WILL BE NOTED ON THE AS-BUILT DRAWINGS. THE LANDSCAPE CONTRACTOR SHALL COORDINATE WITH THE LOCAL CONTROLLER REPRESENTATIVE FOR ANY TESTING AND INSTALLATION CERTIFICATION.

GENERAL IRRIGATION NOTES

1. ALL CITY AND STATE LAWS, RULES AND REGULATION PERTAINING OR RELATING TO ANY PORTION OF THIS WORK, ARE HEREBY INCORPORATED INTO AND MADE A PART OF THESE SPECIFICATIONS AND THEIR PROVISIONS SHALL BE CARRIED OUT BY THE CONTRACTOR.
2. THIS DESIGN IS DIAGRAMMATIC. ALL PIPING, VALVES, ETC. SHOWN WITHIN PAVED AREAS IS FOR DESIGN CLARIFICATION ONLY AND SHALL BE INSTALLED IN PLANTING AREAS WHENEVER POSSIBLE. THE MAINLINE PIPE SHALL BE INSTALLED AND ROUTED TO AVOID IMPORTANT BELOW GRADE CONDITIONS. THE CONTRACTOR SHALL LOCATE ALL VALVES IN SHRUB AREAS UNLESS OTHERWISE DIRECTED BY THE OAR (OWNER'S AUTHORIZED REPRESENTATIVE).
3. THE SPRINKLER SYSTEM DESIGN IS BASED ON THE MAXIMUM OPERATING PRESSURE AND THE MAXIMUM FLOW DEMAND SHOWN ON THE IRRIGATION DRAWINGS AT EACH POINT OF CONNECTION. THE IRRIGATION CONTRACTOR SHALL VERIFY WATER PRESSURE PRIOR TO EACH CONSTRUCTION. REPORT ANY DIFFERENCE BETWEEN THE WATER PRESSURE INDICATED ON THE DRAWINGS AND THE ACTUAL PRESSURE READING AT THE IRRIGATION POINT OF CONNECTION TO THE OWNER'S AUTHORIZED REPRESENTATIVE. IN THE EVENT PRESSURE DIFFERENCES ARE NOT REPORTED PRIOR TO THE START OF CONSTRUCTION, THE IRRIGATION CONTRACTOR SHALL ASSUME FULL RESPONSIBILITY FOR ANY REVISION NECESSARY.
4. DO NOT WILLFULLY INSTALL THE SPRINKLER SYSTEM AS SHOWN ON THE DRAWINGS WHEN IT IS OBVIOUS IN THE FIELD THAT UNKNOWN OBSTRUCTIONS, GRADE DIFFERENCES OR DIFFERENCES IN THE AREA DIMENSIONS EXIST THAT MIGHT NOT HAVE BEEN GIVEN CONSIDERATION IN THE ENGINEERING. SUCH OBSTRUCTIONS OR DIFFERENCES SHOULD IMMEDIATELY BE BROUGHT TO THE ATTENTION OF THE OWNER'S AUTHORIZED REPRESENTATIVE. IN THE EVENT THIS NOTIFICATION IS NOT PERFORMED, THE IRRIGATION CONTRACTOR SHALL ASSUME FULL RESPONSIBILITY FOR ANY REVISIONS NECESSARY.
5. THE IRRIGATION CONTRACTOR SHALL FLUSH AND ADJUST ALL SPRINKLER HEADS AND VALVES FOR OPTIMUM COVERAGE AND TO PREVENT OVER SPRAY ONTO WALKS, STREETS, WALLS, ETC. THIS SHALL INCLUDE USE OF VARIABLE ARC SPRINKLERS AND PRESSURE COMPENSATING SCREENS, SELECTED TO BEST DEGREE OF ARC TO FIT THE EXISTING SITE CONDITIONS AND TO THROTTLE THE FLOW CONTROL AT EACH REMOTE CONTROL VALVE TO OBTAIN THE OPTIMUM OPERATING PRESSURE FOR EACH SYSTEM.
6. ALL LATERAL LINE PIPING UNDER PAVING WITHOUT A SLEEVE SHALL BE PVC SCHEDULE 40 PIPE AND SHALL BE INSTALLED PRIOR TO PAVING.
7. TREE LOCATIONS TAKE PRIORITY OVER IRRIGATION PIPING. STAKE TREE LOCATIONS PRIOR TO TRENCHING FOR PIPE.
8. ALL SPRINKLER EQUIPMENT NOT OTHERWISE DETAILED OR SPECIFIED SHALL BE INSTALLED AS PER MANUFACTURER'S RECOMMENDATIONS AND SPECIFICATIONS.
9. REFER TO SPECIFICATIONS FOR ADDITIONAL DETAILED INFORMATION.

EXISTING IRRIGATION SYSTEMS

THIS PROJECT IS A MODIFICATION OF AN EXISTING (E) SYSTEM. THE CONTRACTOR IS RESPONSIBLE FOR FIELD VERIFICATION OF ALL SITE CONDITIONS AND EQUIPMENT RELATED TO THIS SYSTEM. THIS VERIFICATION SHALL INCLUDE, BUT IS NOT LIMITED TO, THE PRESSURE AND FLOW AVAILABLE, THE MAINLINE SIZE AND LOCATION, THE EXISTENCE, LOCATION AND FUNCTION OF VALVES, MASTER VALVES, BACKFLOW AND CONTROLLER. CONTRACTOR SHALL NOTIFY THE OWNER'S AUTHORIZED REPRESENTATIVE (OAR) IMMEDIATELY OF ANY DISCREPANCIES AND/OR CONFLICTS BETWEEN THE FIELD VERIFICATION AND THE DRAWINGS.

WATER MUST BE PROVIDED TO ALL PLANT MATERIAL DURING AND AFTER CONSTRUCTION. THE TIMING AND AMOUNT OF WATER APPLIED SHALL MAINTAIN THE VEGETATION IN A HEALTHY, DISEASE RESISTANT CONDITION.

THE CONTRACTOR SHALL RECORD PHOTOGRAPH (E) CONDITIONS THEN CUT, CAP AND OR DIVERT IRRIGATION LINES PRIOR TO ANY SITE DEMOLITION OR EXCAVATION IN ORDER TO PRESERVE WATERING TO THE REMAINING SITE AREAS DURING AND AFTER CONSTRUCTION.

THE CONTRACTOR SHALL ADD NEW (N) HEADS TO MATCH THE (E) SYSTEM AND ADJUST/ RELOCATE (E) SPRINKLER HEADS TO ACCOMMODATE THE PROPOSED INSTALLATION AND ENSURE 100% COVERAGE OF THE EXISTING AND NEW PLANTINGS. NEW (N) HEADS MAY BE ADDED IN ONE OF THE FOLLOWING WAYS:

(A) CONNECT TO AN (E) LATERAL LINE/ CONTROLLER STATION PROVIDING SIMILAR WATERING REQUIREMENTS AS THE PLANT MATERIAL PROPOSED. ADD (N) HEADS TO MATCH THE (E) HEADS AND ADJUST THE CONTROLLER TIMING AS NECESSARY.

(B) CONNECT TO THE PRESSURE MAINLINE OF THE (E) IRRIGATION SYSTEM AFTER THE (E) BACKFLOW DEVICE AND RUN CONTROL WIRES FROM A (N) CONTROLLER TO THE VALVES. WIRING TO (E) CONTROLLER POSSIBLE IF THERE ARE AVAILABLE STATION(S) OR MORE CAN BE ADDED.

(C) CONNECT TO THE EXISTING IRRIGATION WATER SOURCE OR MAINLINE AND PROVIDE A NEW BACKFLOW DEVICE AND AUTOMATIC CONTROLLER TO CONTROL THE VALVES.

YOU NOT EXCEED THE MAXIMUM GALLONS PER MINUTE AN EXISTING PIPE CAN PROVIDE (FLOW VELOCITY SHALL NOT BE GREATER THAN 5 FEET PER SECOND).

THE CONTRACTOR SHALL VERIFY IF THE EXISTING SYSTEM USES A MASTER VALVE - ANY NEW VALVES MUST BE CONNECTED BY WIRE TO THE MASTER VALVE AND CONTROLLER.

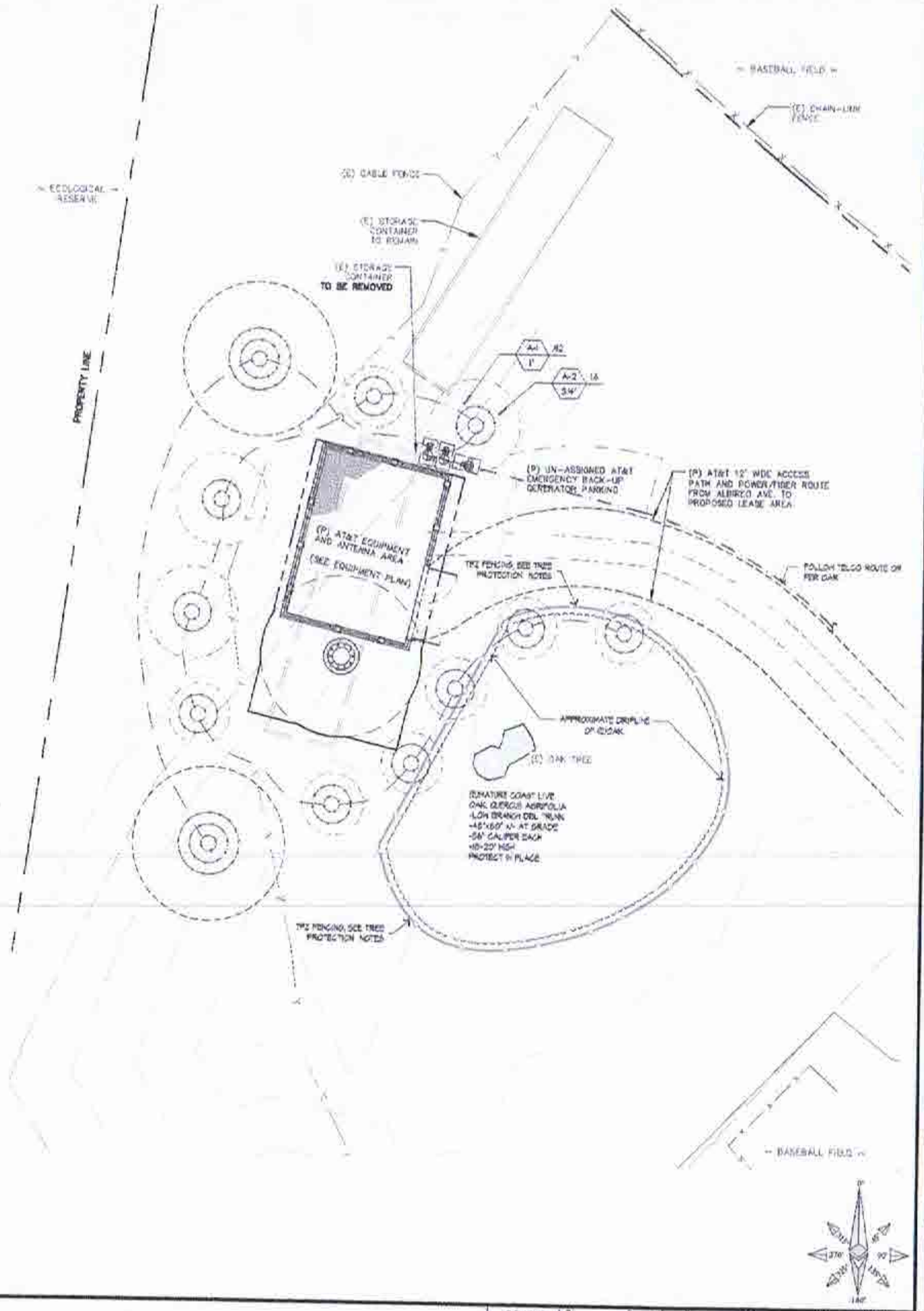

SITE PLAN

SCALE 1/8"=1'-0" 0 4 8 16 32

1

APPLICANT:

The NEW at&t
1452 EDINGER AVE., 3RD FLOOR
TUSTIN, CA 92780

ENGINEER:

Eukon
an SPC Communications, Inc. Company
65 POST, SUITE 1000
IRVINE, CA 92618
TEL: (949) 553-8566
www.eukongroup.com

DRAWN BY:	HT/NP/AS
CHECKED BY:	IB/AG

REVISIONS:

REV	DATE	DESCRIPTION
C	11/13/18	100% ZONING DRAWING
A	11/06/18	90% ZONING DRAWING

LICENSER:

DMLA
Landscape Architecture
30103 Alicante Dr, Dana Point, Ca 92629
davidmlaca@cox.net
(949) 388-5368

PROJECT INFORMATION:

CSLO4176
300 ALBIREO AVE.
LOMPOC, CA 93436

SHEET TITLE:

IRRIGATION PLAN

SHEET NUMBER:

L-2

EXHIBIT D

OPTIMUM ANTENNA REQUIREMENTS (VERIFY WITH CURRENT RFDS)

	SECTOR	NEW ANTENNA					TRANSMISSION CABLE	
		TECHNOLOGY	MODEL	SIZE	ANTENNA AZIMUTH	RAD CENTER	LENGTH	COUNT
BETA SECTOR	B1	LTE	KATHREIN 800-10966K	8'	50°	53'	632'	1 FIBER 2 POWER
	B2	LTE	QUINTEL QS8658-3e	8'	50°	53'		
	B3	LTE	QUINTEL QS8658-3e	8'	50°	53		
	B4	LTE	QUINTEL QS8658-3e	8'	50°	53'		
ALPHA SECTOR	A1	LTE	QUINTEL QS8658-3e	8'	150°	53'	630'	1 FIBER 2 POWER
	A2	LTE	QUINTEL QS8658-3e	8'	150°	53'		
	A3	LTE	QUINTEL QS8658-3e	8'	150°	53'		
	A4	LTE	KATHREIN 800-10966K	8'	150°	53'		
GAMMA SECTOR	C1	LTE	KATHREIN 800-10966K	8'	270°	53'	680'	1 FIBER 2 POWER
	C2	LTE	QUINTEL QS8658-3e	8'	270°	53'		
	C3	LTE	QUINTEL QS8658-3e	8'	270°	53'		
	C4	LTE	QUINTEL QS8658-3e	8'	270°	53'		

REMOTE RADIO UNITS

	SECTOR	RRU TYPE	RRU LOCATION (DISTANCE FROM ANTENNA)	MINIMUM CLEARANCES ABOVE	BELOW	SIDES
ALPHA SECTOR	A1	ERICSSON RRUS – 4449 B5/B12	±15'	18"	6"	0"
	A1	ERICSSON RRUS – 8843 B2/B66A	±15'	18"	6"	0"
	A1	–	–	–	–	–
	A2	ERICSSON RRUS – 4478 B14	±15'	18"	6"	0"
	A2	–	–	–	–	–
	A2	–	–	–	–	–
	A3	–	–	–	–	–
	A3	–	–	–	–	–
	A3	–	–	–	–	–
	A4	ERICSSON RRUS – E2 B29	±15'	18"	6"	0"
	A4	ERICSSON RRUS – 4415 B30	±15'	18	6"	0"
	A4	–	–	–	–	–
BETA SECTOR	B1	ERICSSON RRUS – 4449 B5/B12	±15'	18"	6"	0"
	B1	ERICSSON RRUS – 8843 B2/B66A	±15'	18"	6"	0"
	B1	–	–	–	–	–
	B2	ERICSSON RRUS – 4478 B14	±15'	18"	6"	0"
	B2	–	–	–	–	–
	B2	–	–	–	–	–
	B3	–	–	–	–	–
	B3	–	–	–	–	–
	B3	–	–	–	–	–
	B4	ERICSSON RRUS – E2 B29	±15'	18"	6"	0"
	B4	ERICSSON RRUS – 4415 B30	±15	18"	6"	0"
	B4	–	–	–	–	–
GAMMA SECTOR	C1	ERICSSON RRUS – 4449 B5/B12	±15'	18"	6"	0"
	C1	ERICSSON RRUS – 8843 B2/B66A	±15'	18"	6"	0"
	C1	–	–	–	–	–
	C2	ERICSSON RRUS – 4478 B14	±15'	18"	6"	0"
	C2	–	–	–	–	–
	C2	–	–	–	–	–
	C3	–	–	–	–	–
	C3	–	–	–	–	–
	C3	–	–	–	–	–
	C4	ERICSSON RRUS – E2 B29	±15'	18"	6"	0"
	C4	ERICSSON RRUS – 4415 B30	±15'	18"	6"	0"
	C4	–	–	–	–	–

SURGE SUPPRESSION SYSTEM

	MANUFACTURER	PART NUMBER	QTY	LOCATION
TYPICAL	RAYCAP	DC12-48-48-60-0-25E	3	MOUNTED BELOW RADIO AT NEW CMU WALL ENCLOSURE
	RAYCAP	DC9-48-60-24-8C-EV	3	MOUNTED ONTO NEW MONOPINE

NOTES TO CONTRACTOR

1. CONTRACTOR IS TO REFER TO AT&T'S MOST CURRENT RADIO FREQUENCY DATA SHEET (RFDS) PRIOR TO CONSTRUCTION.
2. CABLE LENGTHS WERE DETERMINED BASED ON A VISUAL INSPECTION DURING SITE WALK. CONTRACTOR TO VERIFY ACTUAL LENGTH DURING PRE-CONSTRUCTION WALK.
3. CONTRACTOR TO USE ROSENBERGER FIBER LINE HANGER COMPONENTS (OR ENGINEER APPROVED EQUAL).
4. CONTRACTOR TO USE CABLES SPECIFIED (OR ENGINEER APPROVED EQUAL).

SCALE NOTE
IF DIMENSIONS SHOWN ON PLAN DO NOT SCALE CORRECTLY, CHECK FOR REDUCTION OR ENLARGEMENT FROM ORIGINAL PLANS.

NOTE:
ALL ANTENNAS AND RELATED EQUIPMENT TO BE PAINTED TO MATCH MONOPOLE.

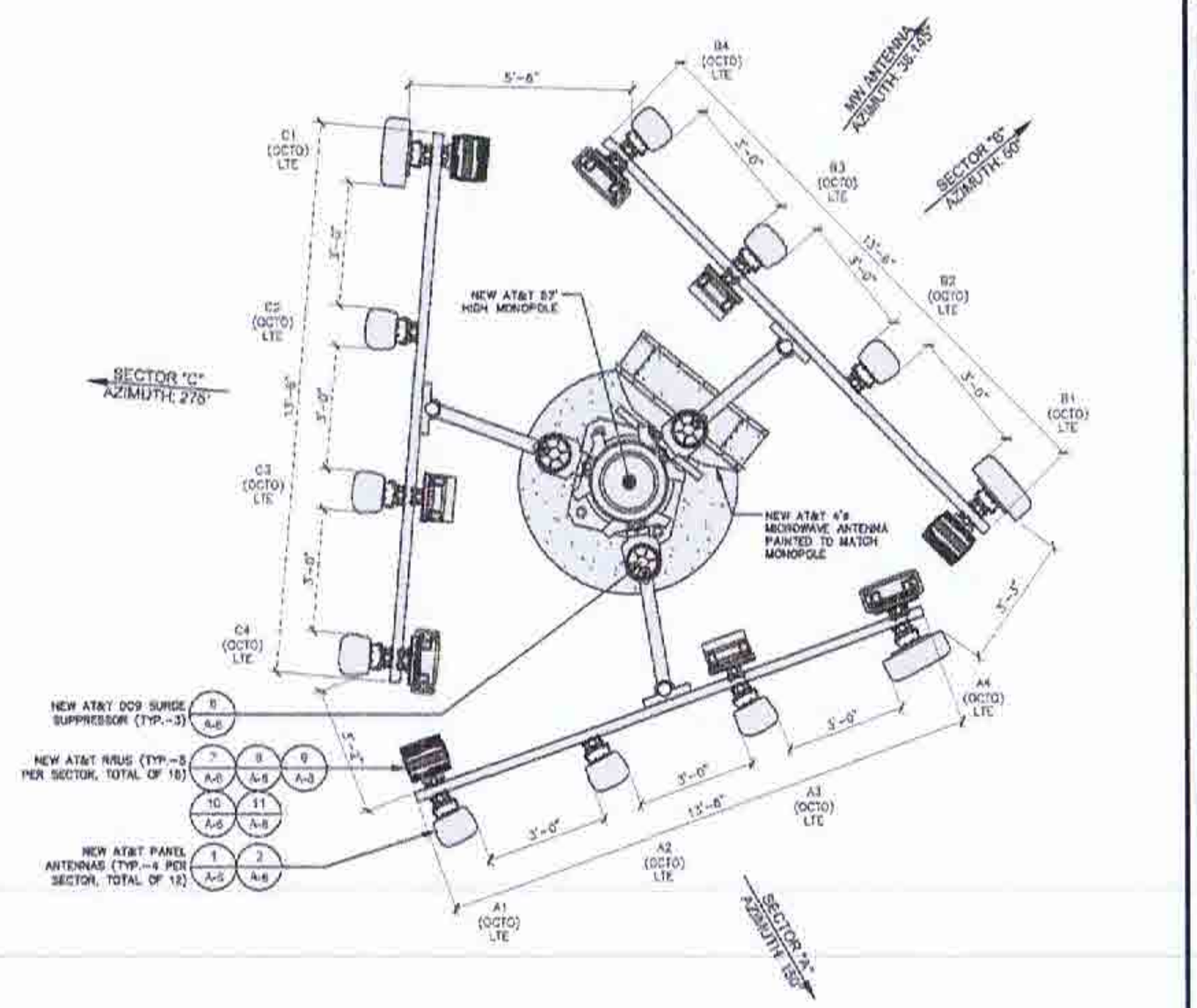

APPLICANT

The NEW at&t
1452 EDINGER AVE., 3RD FLOOR
TUSTIN, CA 92780

ENGINEER

Eukon
an SFC Communications, Inc. Company
65 POST, SUITE 1000
IRVINE, CA 92618
TEL: (949) 553-8566
www.eukongroup.com

DRAWN BY:	AC
CHECKED BY:	AC

REVISIONS

REV	DATE	DESCRIPTION
0	11/10/20	100% CONSTRUCTION DRAWING
A	11/03/20	90% CONSTRUCTION DRAWING

LICENSEE

DATE SIGNED: 11-10-20

PROJECT INFORMATION

CSL04176
300 ALBIREO AVE.
LOMPOC, CA 93436

SHEET TITLE

ANTENNA AND RRU SCHEDULE/ANTENNA LAYOUT

SHEET NUMBER

A-3

NEW ANTENNA AND RRU SCHEDULE | SCALE NONE | 1

NEW ANTENNA LAYOUT | SCALE 1/2"=1'-0" | 2

KATHREIN - 800-10966K

INPUT:	5 x 4.3-10 FEMALE
CONNECTOR POSITION:	BOTTOM
ADJUSTMENT MECHANISM:	PANPET, CONTINUOUSLY ADJUSTABLE
WIND LOAD (AT RATED WIND SPEED 150km/h):	MAXIMUM 1405 N/316 lbf TRANSVERSE 1405 N/315 lbf
MAX. WIND VELOCITY:	241 km/h / 150 mph
DIMENSIONS (L x W x D):	96.0 x 20.0 x 6.9 INCHES (2438 x 508 x 175 mm)
CATEGORY OF MOUNTING HARDWARE:	XH (X=HEAVY)
WEIGHT:	32.0 kg / 57.0 kg (CLAMPS INCL.) (70.6 lb / 125.7 lb (CLAMPS INCL.)

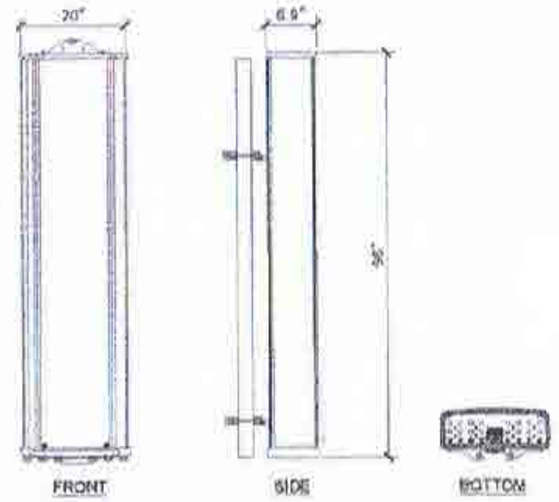

ANTENNA | 1

QUINTEL - QS8658-3e

DIMENSIONS (L x W x D):	96.0 in x 12 in x 9.8 in (2438mm x 304mm x 249mm)
WEIGHT WITH MOUNTING:	113.4 lbs (51.4 kg)
NO. OF CONNECTORS:	8x 7/16 DIN FEMALE LONG NECK
MAX WIND SPEED:	150mph (67 m/s)
FRONT WIND LOAD:	352 N (79.2 lbs)
SIDE WIND LOAD:	695 N (156 lbs)

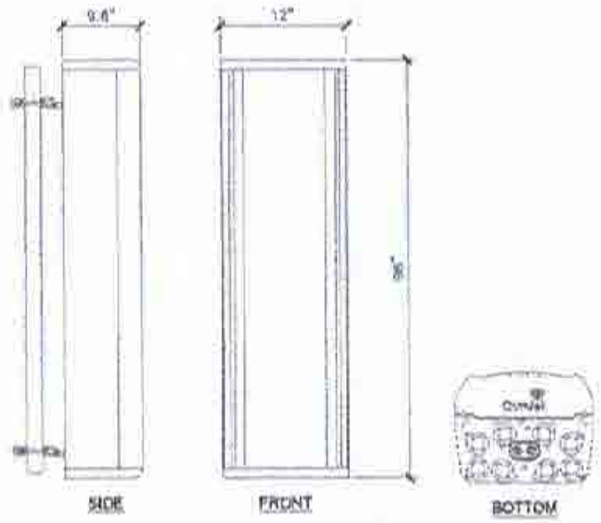

ANTENNA | 2

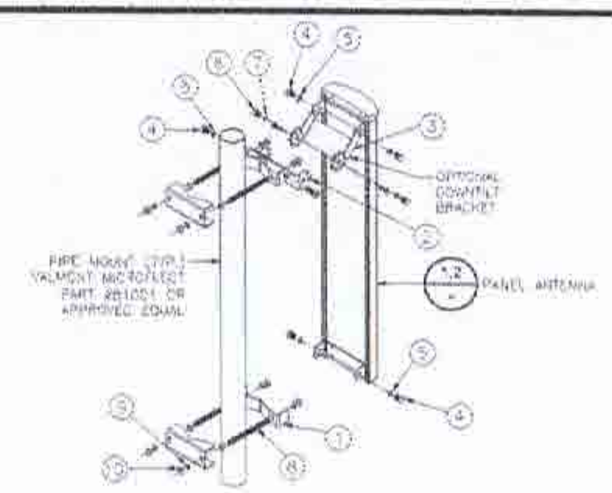

NOTES:
1. INSERT SCISSOR BRACKETS BETWEEN THE UPPER ANTENNA MOUNTING BRACKET AND THE UPPER POLE ADAPTER BRACKET. SECURE USING 1/2 INCH HARDWARE PROVIDED.
2. TO SET THE DEGREE OF DOWNTILT, ALIGN THE DESIRED HOLES ON THE SCISSOR BRACKETS AND SECURE USING 5/16 INCH HARDWARE PROVIDED.
3. THE NUMBER OF CONNECTORS WILL VARY BASED ON ANTENNA TYPE.

ITEM	QTY	DESCRIPTION
1	1	ADAPTER, POLE, LOWER
2	1	BRACKET, DOWNTILT, POLE
3	1	BRACKET, DOWNTILT, ANTENNA
4	4	1/2 x 1 HEX HEAD BOLT
5	8	1/2 SPLIT WASHER
6	2	5/16 x 1 HEX HEAD BOLT
7	2	5/16 SPLIT WASHER
8	4	1/2" THREADED ROD
9	8	1/2" SPLIT WASHER
10	12	1/2" NUT

ANTENNA MOUNTING | 3

NOTE: ANTENNAS, RF EQUIPMENT AND HARDWARE TO BE INSTALLED PER MANUFACTURERS SPECIFICATIONS.

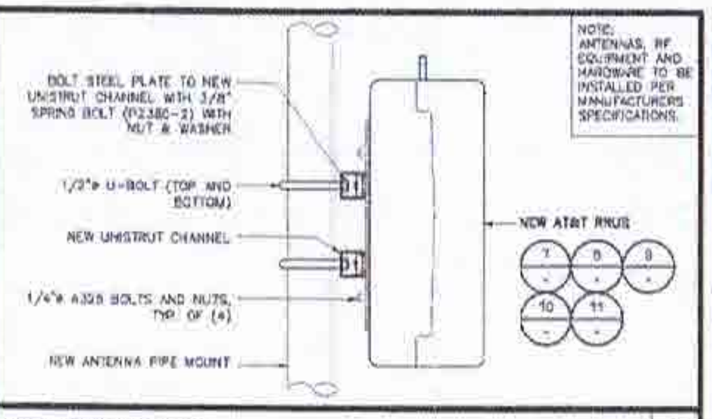

RRU MOUNTING | 4

ERICSSON BASEBAND - 6630

DIMENSIONS (H x W x D):	44.45x482.6x300 mm (1.75"x19"x13.78")
TEMPERATURE:	0 TO +55°C
RELATIVE HUMIDITY:	5-95%
ABSOLUTE HUMIDITY:	1-29 g/m³

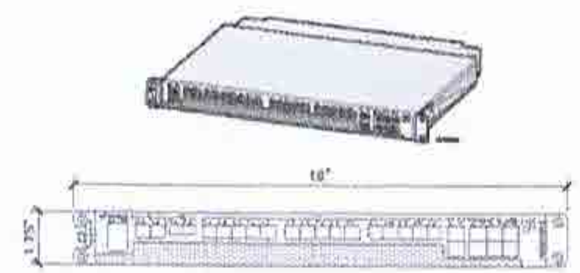

BBU-6630 | 5

RAYCAP DC9-48-60-24-8C-EV

DIMENSIONS (L x W x D):	280x310 mm (11"x24")
NOMINAL OPERATING VOLTAGE:	48 VDC
NOMINAL DISCHARGE CURRENT:	20 kA 8/20 µs
MAXIMUM DISCHARGE CURRENT:	60 kA 8/20 µs
MAXIMUM CONTINUOUS OPERATING VOLTAGE:	75 VAC
VOLTAGE PROTECTION RATING:	400V
WIND LOADING:	150 MPH (SUSTAINED) 195 MPH (GUST)
TOTAL WEIGHT:	32.8 LBS.

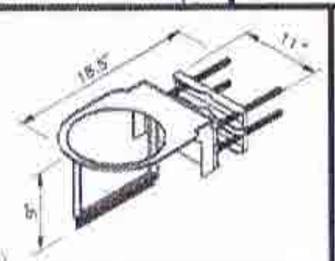

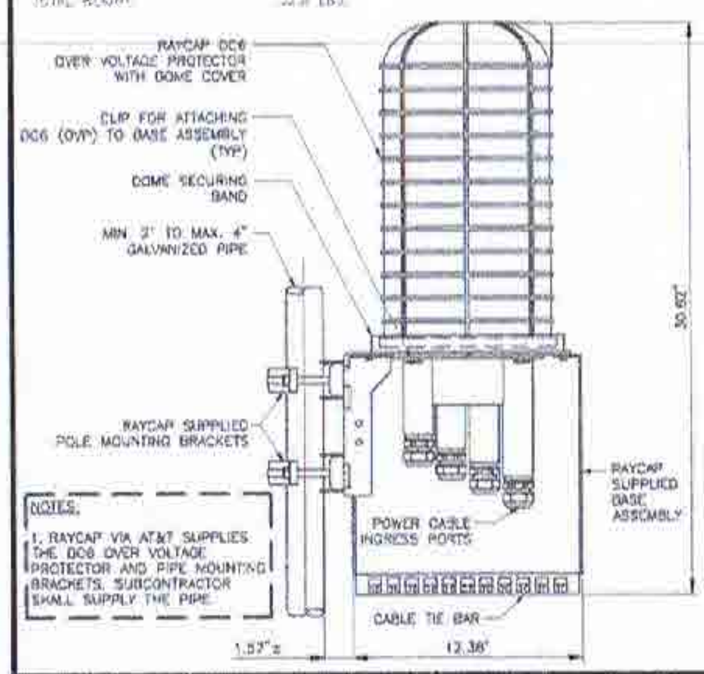

NOTES:
1. RAYCAP VIA AT&T SUPPLIES THE DC9 OVER VOLTAGE PROTECTOR AND PIPE MOUNTING BRACKETS. SUBCONTRACTOR SHALL SUPPLY THE PIPE.

DC SURGE SUPPRESSION | 6

ERICSSON RRUS - 4415 B30

DIMENSIONS, WIDTH:	13.19" x 5.39" x 14.96"
POWER CONSUMPTION:	6 x 60W
WEIGHT:	41 LBS. (INCL. MOUNTING HARDWARE)

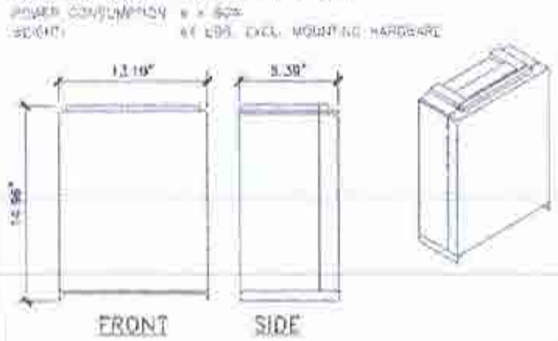

RRU-4415 B30 | 7

ERICSSON RRUS - 4478 B14

DIMENSIONS, WIDTH:	16.5" x 13.4" x 7.7"
POWER CONSUMPTION:	850W
WEIGHT:	59.9 LBS.

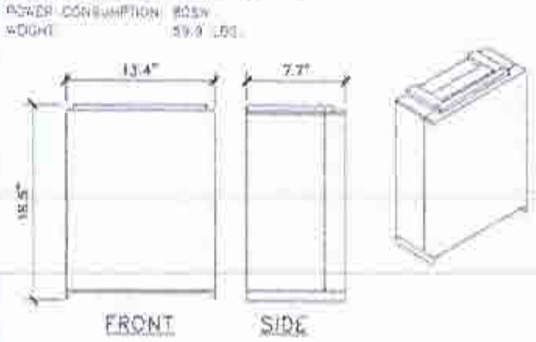

RRU-4478 B14 | 8

ERICSSON RRUS-8843 B2/B66A

DIMENSIONS, WIDTH:	13.2" x 10.9" x 14.9"
POWER CONSUMPTION:	1520 W
WEIGHT:	32 LBS.

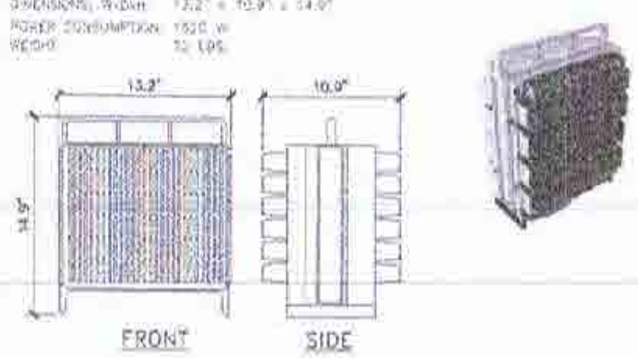

RRU-8843 B2/B66A | 9

ERICSSON RRUS-E2 B29

DIMENSIONS, WIDTH:	470x185x318 mm (18.5"x7.28"x20.39")
POWER CONSUMPTION:	2 x 40W
TOTAL WEIGHT:	52.9 LBS

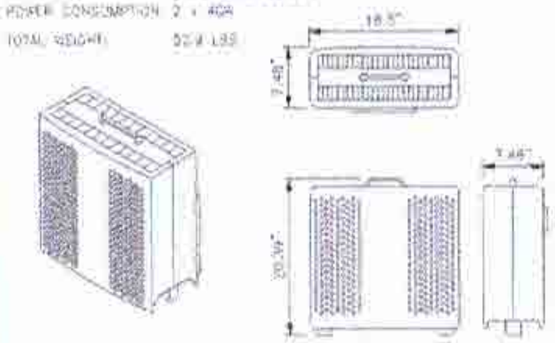

RRU-E2 B29 | 10

ERICSSON RRUS-4449 B5/B12

DIMENSIONS, WIDTH:	13.19" x 9.44" x 17.9"
POWER CONSUMPTION:	1440 W
WEIGHT:	71 LBS.

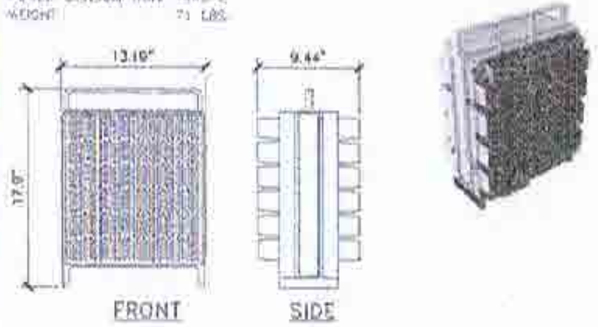

RRU-4449 B5/B12 | 11

ERICSSON BASEBAND - 5216

DIMENSIONS (WxHxD):	31x250x310 mm (1.22"x11.02"x12.20")

BBU 5216 CONTAINS BUILT-IN CELL SITE ROUTER FUNCTIONALITY & IS EQUIPPED WITH ETHERNET PORTS FOR TRANSPORT, WHICH CAN BE USED FOR REDUNDANCY OR FOR CONNECTING OTHER EQUIPMENT.
- NI-A: 1x GigE Copper Electrical Ethernet RJ-45 Ethernet port
- NI-B and NI-C: 2x 10Gbps Electrical/Optical Ethernet (SFP+)

8x 250 TO 100 SFP/SFP + COMBO PORTS

2x 10G PORTS

BBU 5216 SUPPORTS 2.5 GB, 5 GB AND 10 GBT CONNECTIONS

BBU 5216 | 12

APPLICANT:

The NEW at&t
1452 EDINGER AVE., 3RD FLOOR
TUSTIN, CA 92780

ENGINEER:

Eukon
an SFC Communications, Inc. Company
65 POST, SUITE 1000
IRVINE, CA 92618
TEL: (949) 553-8566
www.eukongroup.com

DRAWN BY:	AG
CHECKED BY:	AG

REVISIONS:

REV	DATE	DESCRIPTION
0	11/13/20	100% CONSTRUCTION DRAWING
A	11/03/20	90% CONSTRUCTION DRAWING

LICENSEE:

DATE SIGNED: 11-19-20

PROJECT INFORMATION:

CSL04176
300 ALBREO AVE.
LOMPOC, CA 93436

SHEET TITLE:

EQUIPMENT SPECIFICATIONS

SHEET NUMBER:

A-6

EMERSON NETSURE - 512 DC POWER SYSTEM

DC POWER SYSTEM FEATURES:

NOMINAL SYSTEM VOLTAGE:	−48 VDC or +24 VDC
CONTROL:	MICROPROCESSOR (ACU+)

RATED OUTPUT CAPACITY - MAXIMUM CONFIGURATION

SYSTEM:	525 amps at −48 VDC plus redundancy 400 amps at +24 VDC plus redundancy
RECTIFIER:	2000 watts (41.7 A)
CONVERTER:	1200 watts (50 A), −48 VDC to +24 VDC
DISTRIBUTION PANEL (TOP):	Wired for (16) +24V and (13) −48 V bullet positions
(BOTTOM):	(30) −48 V bullet positions

ENVIRONMENTAL:

OPERATING TEMPERATURE:	−40 °F to 115 °F (−40 °C to 46 °C) continuous operation
HUMIDITY:	0% to 95% relative humidity, non-condensing

THERMAL SOLUTIONS:

POWER CHAMBER:	2300 watt door-mounted heat exchanger, 2 RU available space for surge protection
BATTERY CHAMBER:	Fan cooled, fresh air ventilation, holds up to (3) battery strings

EQUIPMENT:

GROUND BAR:	10 POSITIONS
TERMINAL BLOCK:	12-position Phoenix alarm block 32-position Phoenix alarm bunching block

MECHANICAL SPECIFICATIONS:

DIMENSIONS:	72"H x 32"W x 39"D
WEIGHT:	752 lbs.

SAFETY:

DC POWER SYSTEM:	UL 1801 Listed (US & Canada), NEBS Level 3
ENCLOSURE:	GR-487, UL 60950, and Seismic Zone 4 compliant

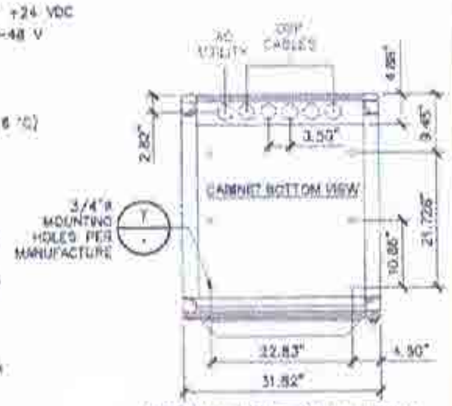

MOUNTING BOLT DOWN PATTERN

NOTE:
SEE DETAIL 9/A-7 FOR EQUIPMENT ANCHORAGE DETAIL.

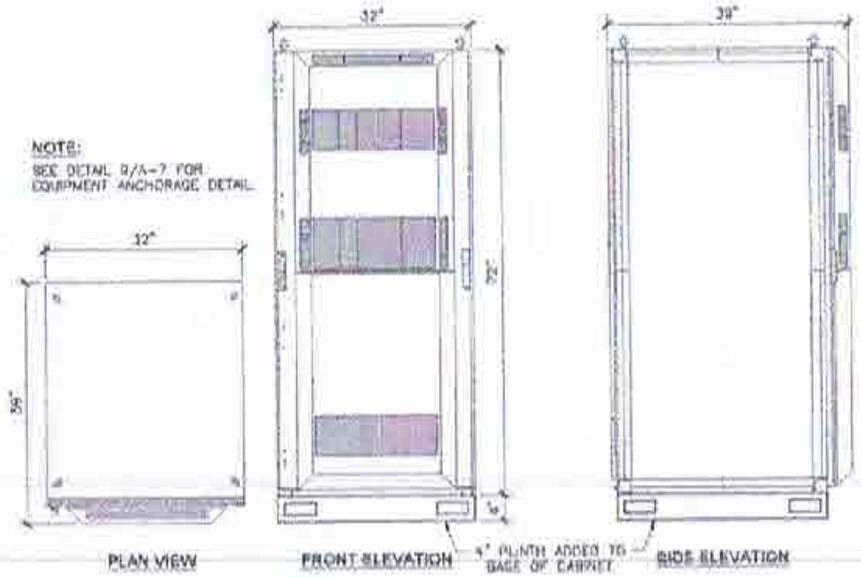

PLAN VIEW — FRONT ELEVATION — SIDE ELEVATION

POWER PLANT | 1

PURCELL CABINET ANCHOR FLX21

DIMENSIONS, WxDxH:	25.27" W X 38.70" H X 30" D
FINISH:	ULTRA-LIGHT GRAY POLYESTER POWDER COAT FINISH
MOUNTING OPTIONS:	4" & 12" RISER PLINTHS, PAD, POLE, H-FRAME, WALL, UNISTRUT, STACKING
OPERATING TEMPERATURE	-40° TO 115° F

CABINET WEIGHT:
THIS SPECIFICATIONS ARE FOR A TYPICAL SINGLE 680100 FLX21 CABINET

EMPTY CABINET:	140 lb
FULL CABINET:	250 lb

HEAT PAYLOAD:
1600 WATTS (@55°C EQPTS)

NOTE:
SEE DETAIL 9/A-7 FOR EQUIPMENT ANCHORAGE DETAIL.

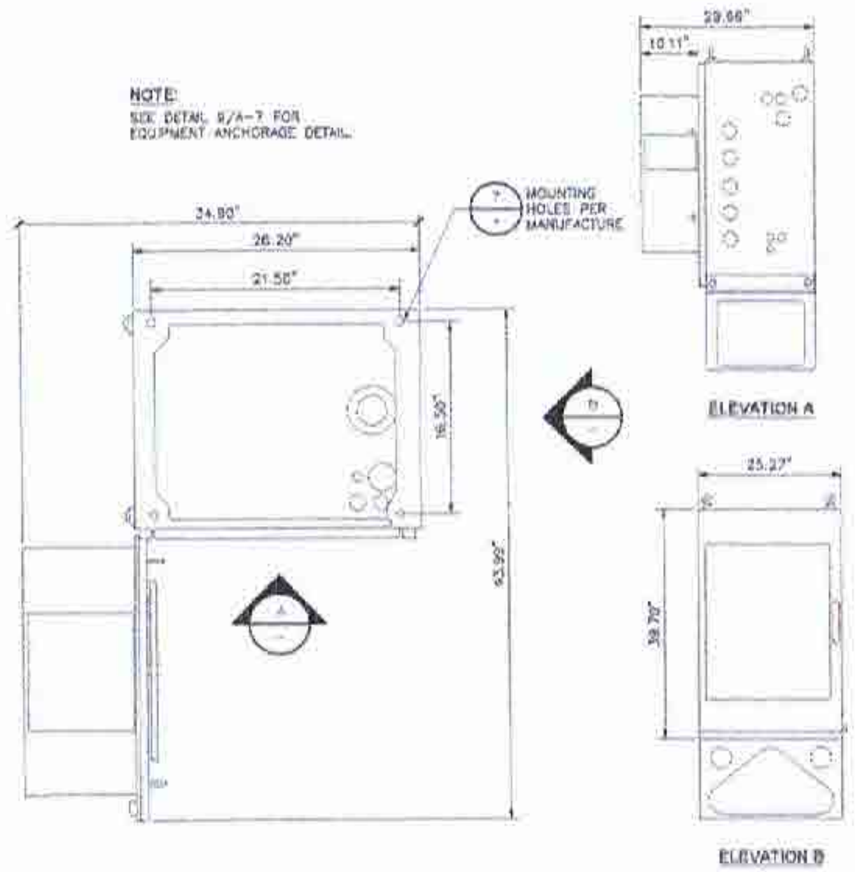

ELEVATION A — ELEVATION B

PURCELL CABINET | 2

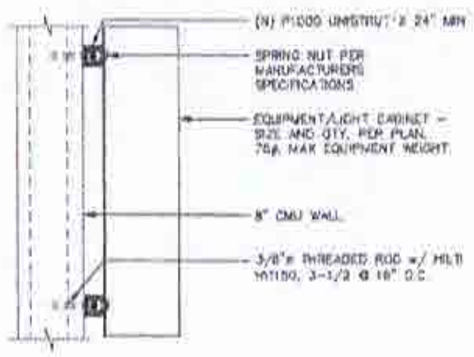

UNISTRUT TO WALL | 3

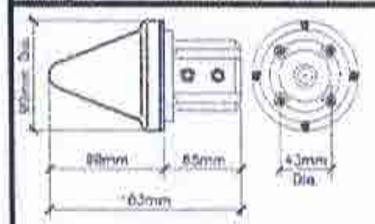

- GPS L1 REFERENCE ANTENNA
- N-TYPE RF CONNECTION (1575.42 MHZ)
- GAIN: 38 DB TYPICAL @ ELEVATION ANGLE 90°)
- REQUIRES +5 VDC POWER (35 MA TYPICAL)
- CLIMATE: OUTDOOR (−40°C TO +85°C)
- WEIGHT
  - 187g ANTENNA WITHOUT MOUNTING BASE
  - 240g MOUNTING BASE (INCLUDED)
- FOR POLE MOUNTING USE 42mm OD TUBE

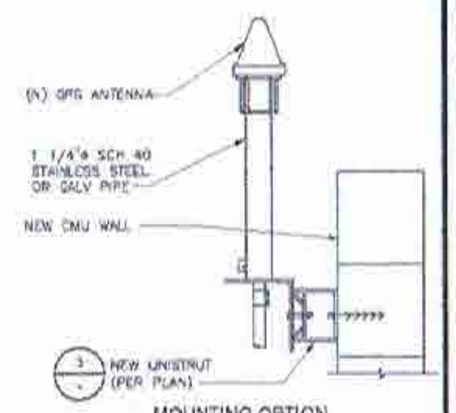

MOUNTING OPTION

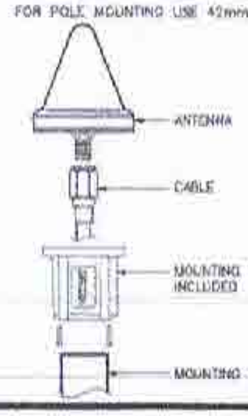

NOTES:

1. LOCATION OF ANTENNA MUST HAVE CLEAR VIEW OF SOUTHERN SKY AND CANNOT HAVE ANY BLOCKAGES EXCEEDING 25% OF THE SURFACE AREA OF A HEMISPHERE AROUND THE GPS ANTENNA.
2. ALL GPS ANTENNA LOCATIONS MUST BE ABLE TO RECEIVE CLEAR SIGNALS FROM A MINIMUM OF FOUR (4) SATELLITES. VERIFY WITH HANDHELD GPS BEFORE FINAL LOCATION OF GPS ANTENNA.
3. THE ANTENNA SHOULD NOT BE LOCATED WITHIN 3FT. OF ANY METALLIC WALLS OR OBJECTS IN ANY RADIAL DIRECTION OF THE DUAL BAND OMNI SECTION.

GPS ANTENNA | 4

ERICSSON BASEBAND R503 XMU
BASEBAND AUXILARY MULTIPLEXING UNIT

DIMENSIONS (H/W/D):	1.22" x 13.8" x 11"
(with rear wall and handle)	
WEIGHT:	3 lbs
HEAT DISSIPATION:	50W

PLATFORM FOR CPRI MULTIPLEXING AND DE-MULTIPLEXING
- 16x SFP+ PORTS
  - PLUGGABLE OPTICAL TRANSCEIVERS
  - DIRECT ATTACH CABLES
- 48V DC POWERING
- FANLESS

TARGET RELEASE – 17+B
- 2x 1100bps +2.4x 2.5 Gbps

BBU-XMU03 | 5

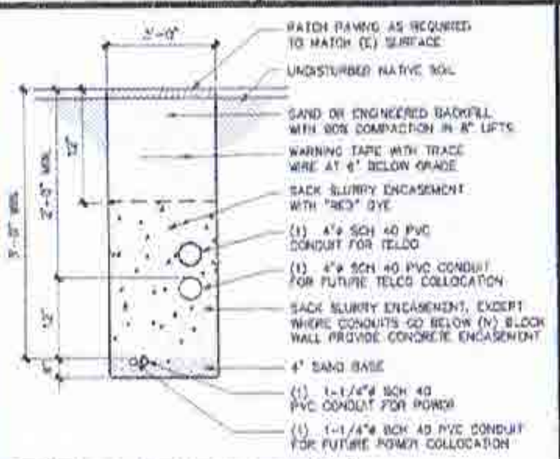

NOTE: PER SECTION 38.44.010(1)(2) PROPOSED TRENCH SHALL BE DESIGNED W/ CAPACITY FOR ADDITIONAL CONDUITS IF SITE IS DETERMINED TO BE SUITABLE FOR COLLOCATION AS DESIGNED

TRENCH | 6

NOTE
PROVIDE MIN. (4) ANCHORS PER CABINET, RACK, GENERATOR OR TANK

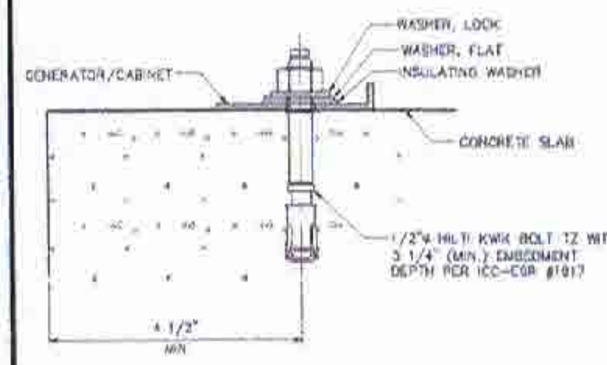

EQUIPMENT ANCHORAGE | 7

RAYCAP DC12-48-60-0-25E

CONNECTION TERMINAL (SUPPRESSOR) METHOD:	COMPRESSION LUG
CONNECTION TERMINAL (SUPPRESSOR) HARDWARE:	COPPER: #14 TO #2 AWG (2.5 to 35 mm²) ALUMINUM #12 TO #2 AWG (4 to 35mm²)
FROM C CONTACT CONNECTION (TERMINAL BLOCK) HARDWARE:	#22 TO #12 AWG [.034 to 4mm²]
OPERATING TEMPERATURE (C):	-40°C TO +100°C
STORAGE TEMPERATURE (C):	-40°C TO +80°C
ENCLOSURE TYPE (OUTDOOR):	NEMA 4, IP67
ENCLOSURE DIMENSION (LxWxH):	24"x24"x8" (609.6x609.6x203.2mm)
WEIGHT:	56.3lbs (25.54kg)

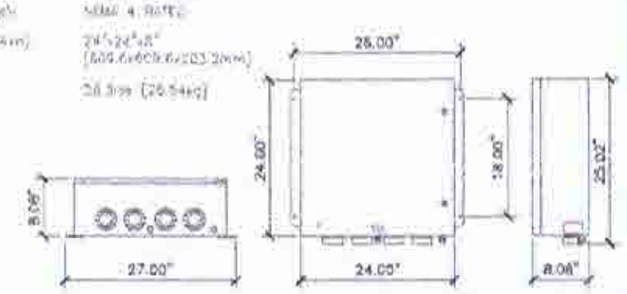

DC12 SURGE SUPPRESSOR | 8

APPLICANT

The NEW at&t
1452 EDINGER AVE., 3RD FLOOR
TUSTIN, CA 92780

ENGINEER

Eukon
an SFC Communications, Inc. Company
65 POST, SUITE 1000
IRVINE, CA 92618
TEL: (949) 553-8566
www.eukongroup.com

DRAWN BY:	AG
CHECKED BY:	AG

REVISIONS

REV	DATE	DESCRIPTION
C	11/10/20	100% CONSTRUCTION DRAWING
A	11/03/20	90% CONSTRUCTION DRAWING

LICENSE:

DATE SIGNED: 11-19-20

PROJECT INFORMATION:

CSL04176
300 ALBIREO AVE.
LOMPOC, CA 93436

SHEET TITLE:

EQUIPMENT SPECIFICATIONS

SHEET NUMBER:

A-7

EXHIBIT E

ATTACHMENT B: CONDITIONS OF APPROVAL

Conditional Use Permit Staff Report for AT&T New Facility at Albiero Avenue
Case No. 19CUP-00000-00022
July 29, 2020

I. PROJECT DESCRIPTION

1. **Proj Des-01 Project Description.** This Conditional Use Permit is based upon and limited to compliance with the project description, the hearing exhibits marked A-I, dated July 29, 2020, and all conditions of approval set forth below, specified plans and agreements included by reference, as well as all applicable County rules and regulations. The project description is as follows:

   The project includes a request by AT&T (the applicant) for a Conditional Use Permit to authorize the construction and operation of an unmanned telecommunications facility pursuant to Section 35.82.060 and Chapter 35.44 of the LUDC for property zoned RR-10. The facility would be sited on a 730-square foot lease area of a 6.94-acre parcel (APN 097-371-051) owned by the County of Santa Barbara, located approximately 1,500 feet south of the entrance to Cabrillo High School in the Lompoc area, Third Supervisorial District.

   The unmanned wireless facility would include nine, 8 ft.-tall panel antennas in three sectors oriented in azimuths of 50, 150, and 275 degrees with four antennas per sector. The antennas are directional and would be mounted at a 53-ft. center height on a proposed 57-ft. tall monopole. All support equipment, including equipment cabinets, mounted equipment, a transformer, and a backup generator for the facility, would be located at the base of the structure within a proposed 8-ft. tall CMU-block equipment enclosure. The generator would only be used during maintenance and in the event of an emergency. The facility would comply with all FCC standards for health and safety, and the effective radiated power of the antennas would not be in excess of the FCC's general public limit at the nearest walking surface to each antenna.

   The equipment would be serviced by 750 feet of new utility lines extending from an existing utility pole. New utility line would be located in a 3-ft. wide trench. The proposed facility would require approximately 15 cu. yd. of cut and 107 cu. yd. of fill for utility trenching and monopole foundation work.

   Access to the facility would be provided via an existing driveway from the end of Albiero Avenue. A parking area immediately east of the facility would be utilized for routine maintenance. The facility would be secured by an 8-ft tall CMU-block enclosure with a locked access gate enclosing the lease area. The entire facility (excluding the utility trenching and parking area) would be contained in the lease area. The project would include new vegetative landscaping around the lease area to provide additional screening at varying heights. Vegetation would include two 24" box Coast Live Oaks (*Quercus agrifolia*), three 5-gal toyon (*Heteromeles*

arbutifolia), and seven 5-gal San Bruno coffeeberry (*Frangula rhamnus*). All protected trees on the property would be preserved. Protected trees (on the basis of their status as mature native trees) in the project area include a double-trunk Coast Live Oak. The protected oak would be fenced with tree protection fencing beginning approximately five feet from the lease area boundary. No trees would be removed.

With the exception of security lights, no exterior lighting is proposed. Two twin security lights would be motion sensor-operated. The security lights would be wall-mounted and directed downward to light only the interior of the lease area.

Any deviations from the project description, exhibits or conditions must be reviewed and approved by the County for conformity with this approval. Deviations may require approved changes to the permit and/or further environmental review. Deviations without the above described approval will constitute a violation of permit approval.

2. **Proj Des-02 Project Conformity**. The grading, development, use, and maintenance of the property, the size, shape, arrangement, and location of the structures, parking areas and landscape areas, and the protection and preservation of resources shall conform to the project description above and the hearing exhibits and conditions of approval below. The property and any portions thereof shall be sold, leased or financed in compliance with this project description and the approved hearing exhibits and conditions of approval thereto. All plans (such as Landscape and Tree Protection Plans) must be submitted for review and approval and shall be implemented as approved by the County.

II. PROJECT SPECIFIC CONDITIONS

3. **Aest-04 BAR Required.** The Applicant shall obtain Board of Architectural Review (BAR) approval for project design. All project elements (e.g., design, scale, character, colors, materials and landscaping shall be compatible with vicinity development and shall conform in all respects to BAR approval (19BAR-00000-00095). **TIMING**: The Applicant shall submit architectural drawings of the project for review and shall obtain final BAR approval prior to issuance of Zoning Clearance. Grading plans, if required, shall be submitted to P&D concurrent with or prior to BAR plan filing.

   MONITORING: The Applicant shall demonstrate to P&D compliance monitoring staff that the project has been built consistent with approved BAR design and landscape plans prior to Final Building Inspection Clearance.

4. **Tel-03 Colors and Painting.** All exposed equipment and facilities (i.e., antennas, support structure, equipment cabinets, etc.) shall be finished (or left unfinished to achieve the same purpose) in non-reflective materials (including painted surfaces) as follows:

   1) All ancillary and support equipment shall be concealed behind the 8-ft. tall CMU block enclosure with gated entry.

2) The equipment enclosure and gated entry shall be finished in light grey.
3) The monopole shall be finished as galvanized steel or in a non-reflective medium grey color to achieve the same effect.
4) All other visible surfaces of the facility (including antennas) will have a non-reflective medium grey finish.

PLAN REQUIREMENTS: Color and material specifications shall be approved by NBAR and identified on final zoning plans submitted by the Permittee to the County prior to Issuance of Zoning Clearance, as well as on final building plans. **MONITORING**: P&D compliance monitoring staff shall conduct a Project Compliance Inspection prior to Final Building Inspection Clearance.

5. **Tel-05 Exterior Lighting.** Except as otherwise noted in the Project Description and development plans, the antenna support structure shall not be lighted. The leased premises shall likewise be unlit except for three motion-detector operated lights on a timer, which limit lighting to the area of the equipment in the immediate vicinity of the antenna support structure. The light fixtures shall be fully shielded, fully cut-off and downcast so as to avoid spillage onto adjacent areas and shall be kept off except when maintenance personnel are actually present at night. **PLAN REQUIREMENTS**: The Permittee shall restate the lighting limitations on the construction plans. Plans for exterior lighting, if any are provided, shall be submitted to the County for review and approval. **TIMING:** This condition shall be satisfied prior to Issuance of Zoning Clearance.

MONITORING: P&D compliance monitoring staff shall conduct a Project Compliance Inspection prior to Final Building Inspection Clearance and respond to any complaints.

6. **Tel-06 Underground Utilities.** Except as otherwise noted in the Project Description and development plans, all utilities necessary for facility operation, including coaxial cable, shall be placed underground. Conduit shall be sized so as provide additional capacity to accommodate utilities for other telecommunication carriers should collocation be pursued in the future. **PLAN REQUIREMENTS**: The Permittee shall restate the provisions for utility undergrounding on all building and grading plans. **TIMING:** This condition shall be satisfied prior to Issuance of Zoning Clearance.

MONITORING: P&D staff shall check plans prior to Issuance of Zoning Clearance.

7. **CulRes-09 Stop Work at Encounter.** The Applicant and/or their agents, representatives or contractors shall stop or redirect work immediately in the event archaeological remains are encountered during grading, construction, landscaping or other construction-related activity. The Applicant shall immediately contact P&D staff, and retain a P&D approved archaeologist and Native American representative to evaluate the significance of the find in compliance with the provisions of the County Archaeological Guidelines and conduct appropriate mitigation funded by the Applicant. **PLAN REQUIREMENTS:** This condition shall be printed on all building and grading plans.

MONITORING: P&D permit processing planner shall check plans prior to Issuance of Zoning Clearance and P&D compliance monitoring staff shall spot check in the field throughout grading and construction.

8. **Air-01 Dust Control.** The Applicant shall comply with the following dust control components at all times including weekends and holidays:
   a. Dust generated by the development activities shall be kept to a minimum with a goal of retaining dust on the site.
   b. During clearing, grading, earth moving, excavation, or transportation of cut or fill materials, use water trucks or sprinkler systems to prevent dust from leaving the site and to create a crust after each day's activities cease.
   c. During construction, use water trucks or sprinkler systems to keep all areas of vehicle movement damp enough to prevent dust from leaving the site.
   d. Wet down the construction area after work is completed for the day and whenever wind exceeds 15 mph.
   e. When wind exceeds 15 mph, have site watered at least once each day including weekends and/or holidays.
   f. Order increased watering as necessary to prevent transport of dust off-site.
   g. Cover soil stockpiled for more than two days or treat with soil binders to prevent dust generation. Reapply as needed.
   h. If the site is graded and left undeveloped for over four weeks, the Applicant shall immediately: (i) Seed and water to re-vegetate graded areas; and/or (ii) Spread soil binders; and/or; (iii) Employ any other method(s) deemed appropriate by P&D or APCD.

PLAN REQUIREMENTS: These dust control requirements shall be noted on all grading and building plans. **PRE-CONSTRUCTION REQUIREMENTS:** The contractor or builder shall provide P&D monitoring staff and APCD with the name and contact information for an assigned onsite dust control monitor(s) who has the responsibility to:
   a. Assure all dust control requirements are complied with including those covering weekends and holidays.
   b. Order increased watering as necessary to prevent transport of dust offsite.
   c. Attend the pre-construction meeting.

TIMING: The dust monitor shall be designated prior to first Building Permit. The dust control components apply from the beginning of any grading or construction throughout all development activities until Final Building Inspection Clearance is issued.

MONITORING: P&D processing planner shall ensure measures are on plans. P&D grading and building inspectors shall spot check; Grading and Building shall ensure compliance onsite. APCD inspectors shall respond to nuisance complaints.

9. **Bio-20 Equipment Storage-Construction.** The Applicant shall designate one or more construction equipment filling and storage areas to contain spills facilitate clean-up and proper disposal and prevent contamination from discharging to the storm drains, street,

drainage ditches, creeks, or wetlands. The areas shall be no larger than 50 x 50 foot unless otherwise approved by P&D and shall be located at least 100 feet from any storm drain, waterbody or sensitive biological resources. **PLAN REQUIREMENTS**: The Applicant shall designate the P&D approved location on all Zoning Clearance and Building Permit plans.

TIMING: The Applicant shall install the area prior to commencement of construction. **MONITORING**: P&D compliance monitoring staff shall ensure compliance prior to and throughout construction.

10. **Bio-20a Equipment Washout-Construction**. The Applicant shall designate one or more washout areas for the washing of concrete trucks, paint, equipment, or similar activities to prevent wash water from discharging to the storm drains, street, drainage ditches, creeks, or wetlands. Note that polluted water and materials shall be contained in these areas and removed from the site as needed. The areas shall be located at least 100 feet from any storm drain, waterbody or sensitive biological resources.

    PLAN REQUIREMENTS: The Applicant shall designate the P&D approved location on all Zoning Clearance and Building Permit plans. **TIMING**: The Applicant shall install the area prior to commencement of construction. **MONITORING**: P&D compliance monitoring staff shall ensure compliance prior to and throughout construction.

11. **Noise-02 Construction Hours**. The Applicant, including all contractors and subcontractors shall limit construction activity, including equipment maintenance and site preparation, to the hours between 7:00 a.m. and 5:00 p.m. Monday through Friday. No construction shall occur on weekends or State holidays. Non-noise generating interior construction activities such as plumbing, electrical, drywall and painting (which does not include the use of compressors, tile saws, or other noise-generating equipment) are not subject to these restrictions. Any subsequent amendment to the Comprehensive General Plan, applicable Community or Specific Plan, or Zoning Code noise standard upon which these construction hours are based shall supersede the hours stated herein. **PLAN REQUIREMENTS:** The Applicant shall provide and post a sign stating these restrictions at all construction site entries. **TIMING**: Signs shall be posted prior to commencement of construction and maintained throughout construction. **MONITORING**: The Applicant shall demonstrate that required signs are posted prior to grading/building permit issuance and pre-construction meeting. Building inspectors and permit compliance staff shall spot check and respond to complaints.

12. **Parking-02 Onsite Construction Parking**. All construction-related vehicles, equipment staging and storage areas shall be located on the subject parcel and outside of the road and highway right of way. The Applicant shall provide all construction personnel with a written notice of this requirement and a description of approved parking, staging and storage areas. The notice shall also include the name and phone number of the Applicant's designee responsible for enforcement of this restriction. **PLAN REQUIREMENTS**: Designated construction personnel parking, equipment staging and storage areas shall be

depicted on project plans submitted for Zoning Clearance. **TIMING**: A copy of the written notice shall be submitted to P&D permit processing staff prior to Issuance of Zoning Clearance. This restriction shall be maintained throughout construction.

MONITORING: P&D permit compliance and Building and Safety shall confirm the availability of designated onsite areas during construction, and as required, shall require re-distribution of updated notices and/or refer complaints regarding offsite parking to appropriate agencies.

13. **Tel-08 FCC Compliance.** The facility shall be operated in strict conformance with: (i) all rules, regulations, standards and guidance published by the Federal Communications Commission ("FCC"), including but not limited to, safety signage, Maximum Permissible Exposure ("MPE") Limits, and any other similar requirements to ensure public protection or (ii) all other legally binding, more restrictive standards subsequently adopted by federal agencies having jurisdiction. Compliance shall be governed by the following:

    a. Permittee shall hire a qualified professional acceptable to the County (wholly independent of Permittee), to perform radio frequency ("RF") field test that measures actual RF electromagnetic exposure at the site. This RF field-testing shall measure all ambient sources of RF energy at the site & report the cumulative RF exposure, including contributions from the site together with other sources of RF energy in the environment as a whole. Measurements shall be made by the responsible professional who will author the report to the County. Report of the results and the author's/professional's findings with respect to compliance with federally established MPE standards shall be submitted to the County w/in 30 days of Final Building Clearance. Permittee shall pay for the cost of the field measurements and preparing the report. The facility shall cease & desist commercial operations until it complies with, or has been modified to comply with, applicable RF standards.

    b. Every 5 years, Permittee shall hire a qualified professional acceptable to the County to perform RF field testing to evaluate compliance with current federally established MPE standards. In the event the adopted RF standards change, Permittee shall submit a report with calculations of the maximum potential public RF exposure from the Project with respect to the revised RF public exposure standards, w/in 90 days of the date the change becomes effective. If calculated levels exceed 80% of the applicable RF standards, Permittee shall notify the County and submit a MPE compliance verification report with the results from current RF field-testing at the site. Permittee shall pay for the cost of preparing the reports. For joint-carrier sites, cumulative reporting may be delegated to one carrier upon the agreement of all carriers at the site. Procedures, penalties & remedies for non-compliance with these reporting requirements shall be governed by the provisions of the Telecom Ordinance & FCC regulations.

c. Prior to the addition/replacement of equipment which has the potential to increase RF emissions at any public location beyond that estimated in the initial application and is w/in the scope of the project description, Permittee shall submit a report providing the calculation of predicted maximum effective radiated power including the new equipment as well as the maximum cumulative potential public RF exposure expressed as a percentage of the public MPE limit attributable to the site as a whole. Once the new equipment has been installed, Permittee shall perform Initial Verification as stated in "1" above.

PLAN REQUIREMENTS: All building plans shall include provisions for MPE compliance. **TIMING**: Initial verification of compliance with RF public MPE standards shall be accomplished no later than 30 days following Final Building Clearance. Continued verification of compliance with MPE requirements shall be accomplished by RF field test reports submitted every 5 years following initial verification.

MONITORING: P&D planner shall review all RF field test reports and estimated maximum cumulative RF exposure reports providing calculations of predicted compliance with the public MPE standard. P&D planner shall monitor changes in RF standards, as well as equipment modifications, additions & RF exposures at the site as reported by the Applicant that might trigger the requirement for field-testing at intervening times between regular test periods.

14. **Tel-09 Project Review.** Five years after Issuance of the Zoning Clearance for the project and no more frequently than every five years thereafter, the Director of P&D may undertake inspection of the project and require the Permittee to modify its facilities subject to the following parameters:

a. **Modification Criteria**. Modifications may be required if, at the time of inspection it is determined that: (i) the Project fails to achieve the intended purposes of the development standards listed in the Telecommunications Ordinance for reasons attributable to design or changes in environmental setting; or (ii) more effective means of ensuring aesthetic compatibility with surrounding uses become available as a result of subsequent technological advances or changes in circumstance from the time the Project was initially approved.

b. **Modification Limits.** The Director's decision shall take into account the availability of new technology, capacity and coverage requirements of the Permittee, and new facilities installed in the vicinity of the site. The scope of modification, if required, may include, but not be limited to a reduction in antenna size and height, collocation at an alternate permitted site, and similar site and architectural design changes. However, the Permittee shall not be required to undertake changes that exceed ten percent (10%) of the total cost of facility construction. The decision of the Director as to modifications required herein shall be deemed final unless appealed in compliance with the provisions of the County Code.

PLAN REQUIREMENTS: The Permittee shall restate the provisions for emissions compliance on all building plans. **TIMING**: Building permit valuation data shall be used for the purpose establishing the estimated cost of installing the facility. At the time of subsequent inspection and upon reasonable notice, the Permittee shall furnish supplemental documentation as necessary to evaluate new technology, capacity and coverage requirements of the Permittee.

MONITORING: P&D compliance monitoring staff shall conduct periodic inspections and ascertain whether more effective mitigation is available with regard to design and technology. In the event of violation, the permit shall be referred to Zoning Enforcement for abatement.

15. **Tel-10 Collocation**. The Permittee shall avail its facility and site to other telecommunication carriers and, in good faith, accommodate all reasonable requests for collocation in the future subject to the following parameters: (i) the party seeking the collocation shall be responsible for all facility modifications, environmental review, Mitigation Measures, associated costs and permit processing; (ii) the Permittee shall not be required to compromise the operational effectiveness of its facility or place its prior approval at risk; (iii) the Permittee shall make its facilities and site available for collocation on a non-discriminatory and equitable cost basis; and (iv) the County retains the right to verify that the use of the Permittee's facilities and site conforms to County policies.

16. **Tel-11 Transfer of Ownership**. In the event that the Permittee sells or transfers its interest in the telecommunications facility, the Permittee and/or succeeding carrier shall assume all responsibilities concerning the Project and shall be held responsible by the County for maintaining consistency with all conditions of approval. The succeeding carrier shall immediately notify the County and provide accurate contact and billing information to the County for remaining compliance work for the life of the facility.

    PLAN REQUIREMENTS: The Permittee shall notify the County of changes in ownership to any or all of the telecommunications facility. **TIMING:** Notification of changes in facility ownership shall be given by the Permittee and/or succeeding carrier to the County within 30 days of such change.

17. **Tel-12 Site Identification.** The Permittee shall clearly identify each piece of equipment installed at a site with the Permittee's name and site number to distinguish from other telecommunication carriers' equipment, including but not limited to: antennas, microwave dishes, equipment shelters, support poles, and cabinetry. The Permittee shall be responsible for clearly marking with permanent paint, tags, or other suitable identification all facility equipment belonging to the Permittee as stated on the site plans.

    TIMING: This condition shall be satisfied prior to Final Building Inspection Clearance. **MONITORING**: P&D permit processing planner shall check plans and P&D compliance

monitoring staff shall conduct compliance inspections as needed to ensure permit compliance.

18. **Tel-13 Facility Maintenance.** The facility shall be maintained in a state of good condition at all times. This includes, but is not limited to: painting; site identification; equipment repair; and keeping the facility clear of debris, trash, and graffiti.

19. **Landscp-01a Landscape for Life.** The Project Applicant shall maintain landscaping for the life of the project. Should the Coast Live Oak tree used to screen the facility die in the future, it shall be replaced by the applicant with a native tree of comparable size, species, and density. The facility owner or designee shall permit the County to conduct site inspections a minimum of one time per year. **MONITORING:** P&D compliance monitoring staff may conduct site inspections once per year if necessary to ensure that landscaping is maintained for the life of the project.

20. **Tel-15 Agreement to Comply.** The facility owner shall sign and record an agreement to comply with the project description and all conditions of approval on a form acceptable to P&D. Such form may be obtained from the P&D office prior to Issuance of Zoning Clearance. The Applicant shall provide evidence that he/she has recorded the Agreement to Comply with Conditions.

21. **Tel-16 Abandonment-Revocation**. The Permittee shall remove all support structures, antennas, equipment and associated improvements and restore the site to its natural pre-construction state within one year of discontinuing use of the facility, upon permit revocation, or upon termination or expiration of a lease authorizing use of the site. Should the Permittee require more than one year to complete removal and restoration activities after discontinuance the Permittee shall apply for a one-time time extension for removal. In the event the Owner requests that the facility or structures remain, the Owner must apply for necessary permits for those structures within one year of discontinued use, if applicable. Compliance shall be governed by the following provisions:

    a. Prior to Issuance of Zoning Clearance, the Permittee shall post a performance security. The security shall equal 10 percent of the installation value of the facility as determined at the time of granting the building permit. The performance security shall be retained until this condition is fully satisfied.
    b. Prior to demolition of the facility, the Permittee shall submit a restoration plan of proposed abandonment to be reviewed and approved by a County approved biologist.
    c. If use of the facility is discontinued for a period of more than one year and the facility is not removed and no time extension has been applied for and/or granted, the County may remove the facility at the Permittee's expense.

III. COUNTY RULES AND REGULATIONS

22. **Rules-01 Effective Date-Not Appealable to CCC.** This Conditional Use Permit shall become effective upon the date of the expiration of the applicable appeal period provided an appeal has not been filed. If an appeal has been filed, the planning permit shall not be deemed effective until final action by the final review authority on the appeal. No entitlement for the use or development shall be granted before the effective date of the planning permit. [LUDC §35.82.020]

23. **Rules-03 Additional Permits Required.** The use and/or construction of any structures or improvements authorized by this approval shall not commence until the all necessary planning and building permits are obtained. Before any Permit will be issued by Planning and Development, the Owner/Applicant must obtain written clearance from all departments having conditions; such clearance shall indicate that the Owner/Applicant has satisfied all pre-construction conditions. A form for such clearance is available from Planning and Development.

24. **Rules-05 Acceptance of Conditions.** The Owner/Applicant's acceptance of this permit and/or commencement of use, construction and/or operations under this permit shall be deemed acceptance of all conditions of this permit by the Owner/Applicant.

25. **Rules-12 CUP Expiration**. The Owner/Applicant shall obtain the required Zoning Clearance within the 18 months following the effective date of this Conditional Use Permit. If the required Zoning Clearance is not issued within the 18 months following the effective date of this Conditional Use Permit, or within such extended period of time as may be authorized in compliance with Section 35.84.030.D of the County Land Use and Development Code, and an application for an extension has not been submitted to the Planning and Development Department, then Conditional Use Permit shall be considered void and of no further effect.

26. **Rules-17 CUP-Void**. This Conditional Use Permit shall become void and be automatically revoked if the development and/or authorized use allowed by this Conditional Use Permit is discontinued for a period of more than 12 months, or within such extended period of time as may be authorized in compliance with Section 35.84.030.D.1.b of the County Land Use and Development Code. Any use authorized by this Conditional Use Permit shall immediately cease upon expiration or revocation of this Conditional Use Permit. Any Zoning Clearance approved or issued pursuant to this Conditional Use Permit shall expire upon expiration or revocation of the Conditional Use Permit. Conditional Use Permit renewals must be applied for prior to expiration of the Conditional Use Permit. [LUDC §35.82.060 & §35.84.060]

27. **Rules-18 CUP and DVP Revisions**. The approval by the County Planning Commission of a revised Conditional Use Permit shall automatically supersede any previously approved Conditional Use Permit upon the effective date of the revised permit.

28. **Rules-22 Leased Facilities.** The Operator is responsible for complying with all conditions of approval contained in this Conditional Use Permit. Any zoning violations concerning

the installation, operation, and/or abandonment of the facility are the responsibility of the Owner and the Operator.

29. **Rules-23 Processing Fees Required**. Prior to issuance of a Zoning Clearance, the Owner/Applicant shall pay all applicable P&D permit processing fees in full as required by County ordinances and resolutions.

30. **Rules-30 Plans Requirements**. The Owner/Applicant shall ensure all applicable final conditions of approval are printed in their entirety on applicable pages of grading/construction or building plans submitted to P&D or Building and Safety Division. These shall be graphically illustrated where feasible.

31. **Rules-31 Condition Compliance Monitoring Required**. The Owner/Applicant shall ensure that the project complies with all approved plans and all project conditions including those which must be monitored after the project is built and occupied. To accomplish this, the Owner/Applicant shall:

    a. Contact P&D compliance staff as soon as possible after project approval to provide the name and phone number of the future contact person for the project and give estimated dates for future project activities;

    b. Sign a separate Agreement to Pay for compliance monitoring costs and remit a security deposit prior to approval of the Zoning Clearance as authorized by ordinance and fee schedules. Compliance monitoring costs will be invoiced monthly and may include costs for P&D to hire and manage outside consultants when deemed necessary by P&D staff (e.g. non-compliance situations, special monitoring needed for sensitive areas including but not limited to biologists, archaeologists) to assess damage and/or ensure compliance. In such cases, the Owner/Applicant shall comply with P&D recommendations to bring the project into compliance. The decision of the Director of P&D shall be final in the event of a dispute. Monthly invoices shall be paid by the due date noted on the invoice;

    c. Note the following on each page of grading and building plans "This project is subject to Condition Compliance Monitoring and Reporting. All aspects of project construction shall adhere to the approved plans, notes, and conditions of approval;

    d. Contact P&D compliance staff at least two weeks prior to commencement of construction activities to schedule an on-site pre-construction meeting to be led by P&D Compliance Monitoring staff and attended by all parties deemed necessary by P&D, including the permit issuing planner, grading and/or building inspectors, other agency staff, and key construction personnel: contractors, sub-contractors and contracted monitors among others.

32. **Rules-32 Contractor and Subcontractor Notification**. The Owner/Applicant shall ensure that potential contractors are aware of County requirements. Owner / Applicant

shall notify all contractors and subcontractors in writing of the site rules, restrictions, and Conditions of Approval and submit a copy of the notice to P&D compliance monitoring staff.

33. **Rules-33 Indemnity and Separation**. The Owner/Applicant shall defend, indemnify and hold harmless the County or its agents or officers and employees from any claim, action or proceeding against the County or its agents, officers or employees, to attack, set aside, void, or annul, in whole or in part, the County's approval of this project.

34. **Rules-37 Time Extensions-All Projects.** The Owner / Applicant may request a time extension prior to the expiration of the permit or entitlement for development. The review authority with jurisdiction over the project may, upon good cause shown, grant a time extension in compliance with County rules and regulations, which include reflecting changed circumstances and ensuring compliance with CEQA. If the Owner / Applicant requests a time extension for this permit, the permit may be revised to include updated language to standard conditions and/or mitigation measures and additional conditions and/or mitigation measures which reflect changed circumstances or additional identified project impacts.

35. **Activities Outside of Lease Area.** Prior issuance of the Zoning Clearance, the Applicant shall provide a lease agreement acceptable to and approved by County Counsel and Planning and Development demonstrating that the Applicant is authorized to use the site, including provisions authorizing ingress, egress, parking, vehicular maneuvering, utilities, temporary fencing, and other construction-related activities required outside of the lease area for construction, operation and maintenance of the facility as described in the Project Description and Conditions of Approval.